Instruction Book

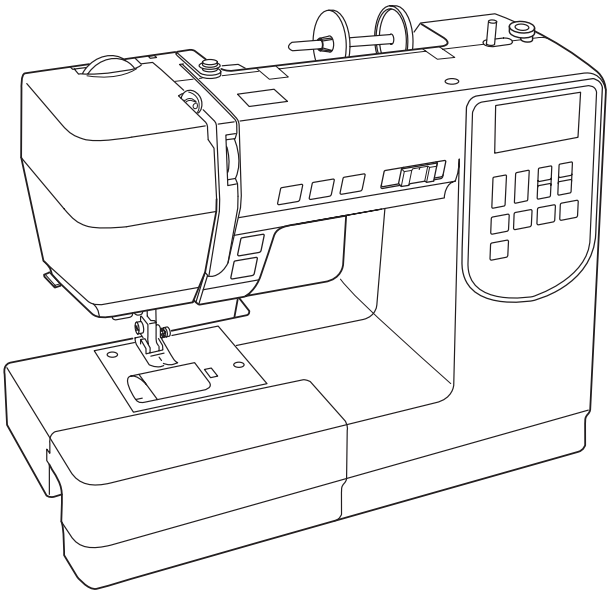

IMPORTANT SAFETY INSTRUCTIONS

When using an electrical appliance, basic safety precautions should always be followed, including the following:

This sewing machine is designed and manufactured for household use only.

Read all instructions before using this sewing machine.

DANGER— To reduce the risk of electric shock:

1. An appliance should never be left unattended when plugged in. Always unplug this sewing machine from the electric outlet immediately after using and before cleaning.

WARNING— To reduce the risk of burns, fire, electric shock, or injury to persons:

1. Do not allow to be used as a toy. Close attention is necessary when this sewing machine is used by or near children.
2. Use this appliance only for its intended use as described in this owner's manual. Use only attachments recommended by the manufacturer as contained in this owner's manual.
3. Never operate this sewing machine if it has a damaged cord or plug, if it is not working properly, if it has been dropped or damaged, or dropped into water. Return this sewing machine to the nearest authorized dealer or service center for examination, repair, electrical or mechanical adjustment.
4. Never operate the appliance with any air opening blocked. Keep ventilation openings of this sewing machine and foot controller free from accumulation of lint, dust and loose cloth.
5. Never drop or insert any object into any opening.
6. Do not use outdoors.
7. Do not operate where aerosol (spray) products are being used or where oxygen is being administered.
8. To disconnect, turn all controls to the off ("O") position, then remove plug from outlet.
9. Do not unplug by pulling on cord. To unplug, grasp the plug, not the cord.
10. Keep fingers away from all moving parts. Special care is required around the sewing machine needle and/or cutting blade.
11. Always use the proper needle plate. The wrong plate can cause the needle to break.
12. Do not use bent needles.
13. Do not pull or push fabric while stitching. It may deflect the needle causing it to break.
14. Switch this sewing machine off ("O") when making any adjustment in the needle area, such as threading the needle, changing the needle, threading the bobbin or changing the presser foot, and the like.
15. Always unplug this sewing machine from the electrical outlet when removing covers, lubricating, or when making any other adjustments mentioned in this owner's manual.

SAVE THESE INSTRUCTIONS

For Europe only:
This appliance can be used by children aged from 8 years and above and persons with reduced physical, sensory or mental capabilities or lack of experience and knowledge if they have been given supervision or instruction concerning use of the appliance in a safe way and understand the hazards involved. Children shall not play with the appliance. Cleaning and user maintenance shall not be made by children without supervision.

For outside Europe (except U.S.A and Canada):
This appliance is not intended for use by persons (including children) with reduced physical, sensory or mental capabilities, or lack of experience and knowledge, unless they have been given supervision or instruction concerning use of the appliance by a person responsible for their safety.
Children should be supervised to ensure that they do not play with the appliance.

Please note that on disposal, this product must be safely recycled in accordance with relevant National legislation relating to electrical/electronic products. If in doubt please contact your retailer for guidance. (European Union only)

TABLE OF CONTENTS

NAMES OF PARTS

Names of Parts....3
Standard Accessories....4
Large Extension Table....5
Stitch Chart....5

GETTING READY TO SEW

Connecting the Power Supply....6
Before Using Your Sewing Machine....6
Operating Instructions:....6
Controlling Sewing Speed....7
Extension Table....7
Free-arm Sewing....7
Machine Operating Buttons....8
LCD Display....9
Function Keys....9
Selecting the Stitch Patterns....9
Direct pattern selection....9
Stitch width adjusting key....9
Stitch length adjusting key....9
Thread cut memory key....9
Presser Foot Lifter....10
Changing the Presser Foot....10
Removing and Attaching the Foot Holder....10
Adjusting the Needle Thread Tension....11-12
Dropping or Raising the Feed Dog....13
Needle Stop Position Setting....13
Changing the Needle....14
Fabric and Needle Chart....14
Setting the Spool of Thread....15
Bobbin Winding....15-17
Threading the Machine....18
Needle Threader....19
Drawing up the Bobbin Thread....20

BASIC SEWING

Straight Stitch Sewing....21
Auto Thread Cutting....21
Changing Sewing Direction....22
Sewing from the Edge of Thick Fabric....22
Using Seam Guides....22
Turning Square Corners....22
Altering the Needle Drop Position....23
Altering the Stitch Length....23
Lock-a-matic Stitch....24
Locking Stitch....24
Triple Stretch Stitch....24
Stretch Stitch....25
Sculpture Stitches....25
Zigzag Stitch....26
Overcasting with Zigzag Stitch....27
Multiple Zigzag Stitch....27
Overedge Stitch....27
Knit Stitch....28
Double Overedge Stitch....28
Attaching Elastic....28
Buttonholes....29
Square Buttonhole....30-32
Round-end and Fine Fabric Buttonhole....33
Keyhole Buttonholes....33
Stretch Buttonhole and Antique Buttonhole....33
Corded Buttonhole....34
Welted Buttonhole....35-36
Darning Stitch....37
Tacking....38
Eyelet....39
Zipper Sewing....40-42
Blind Hemming....43
Button Sewing....44
Gathering....44

DECORATIVE STITCHING

Shelltuck....45
Applique....45
Pintucking....46
Fringing....46
Drawn Work....47
Cross Stitch....47
Fagoting....48
French Knots....48
Scallop Stitch....48
Smocking....49
Stippling Stitch....49
Clasp Stitches....50
Satin Stitches....50
Decorative Stitches....51
Correcting Deformed Stitch Patterns....51

CARE OF YOUR MACHINE

Cleaning the Hook Race and Feed Dog....52
Installing the Bobbin Holder....52
Problems and Warning Signals....53
Troubleshooting....54
Stitch Chart....55

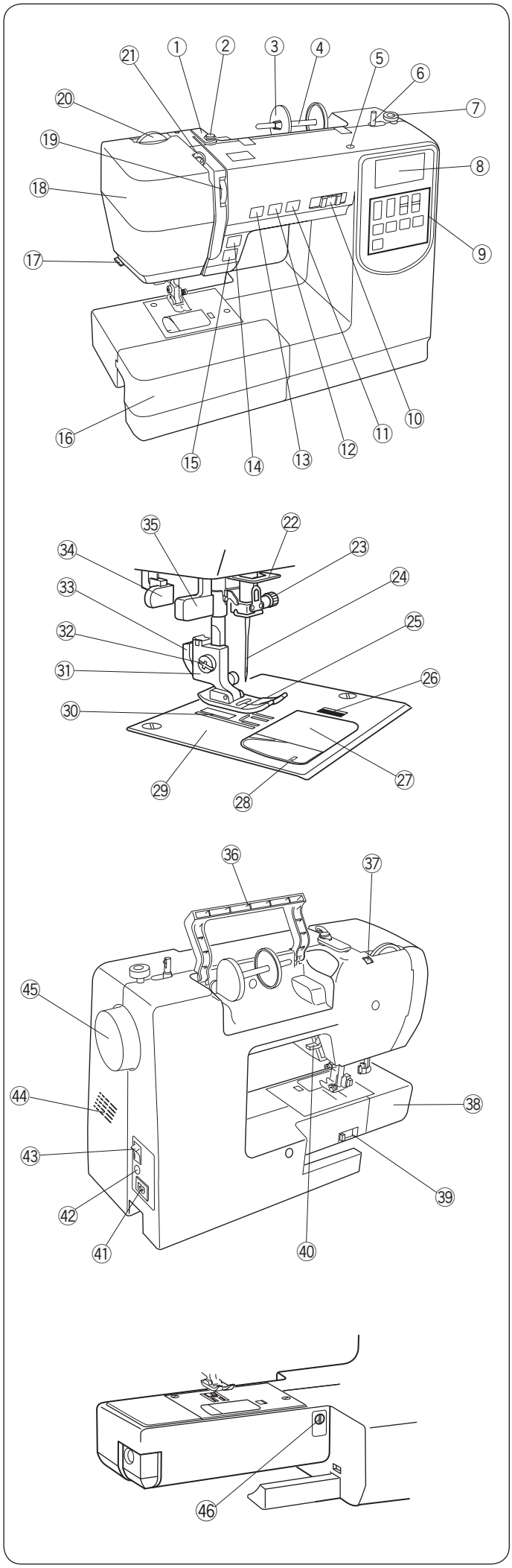

NAMES OF PARTS

Names of Parts

① Upper thread guide
② Bobbin winding tension disk
③ Spool holder (large)
④ Spool pin
⑤ Hole for extra spool pin
⑥ Bobbin winder spindle
⑦ Bobbin winder stopper
⑧ LCD display
⑨ Function keys
⑩ Speed control slider
⑪ Automatic thread cutter button
⑫ Needle up/down button
⑬ Auto-lock button
⑭ Reverse button
⑮ Start/stop button
⑯ Extension table (Accessory box)
⑰ Thread cutter
⑱ Face cover
⑲ Thread tension dial
⑳ Presser foot pressure dial
㉑ Thread take-up lever
㉒ Lower thread guide
㉓ Needle clamp screw
㉔ Needle
㉕ Presser foot
㉖ Hook cover release button
㉗ Hook cover plate
㉘ Thread cutter
㉙ Needle plate
㉚ Feed dogs
㉛ Foot holder
㉜ Setscrew
㉝ Lever
㉞ Buttonhole lever
㉟ Needle threader
㊱ Carrying handle
㊲ Hole for stitch chart
㊳ Free-arm
㊴ Drop feed lever
㊵ Presser foot lifter
㊶ Power inlet
㊷ Foot control jack
㊸ Power switch
㊹ Ventilation openings
㊺ Handwheel
㊻ Feed balancing dial

NOTE:
- To carry the sewing machine, hold the carrying handle with your hand, and support the sewing machine with the other hand.
- Design and specifications are subject to change without prior notice.

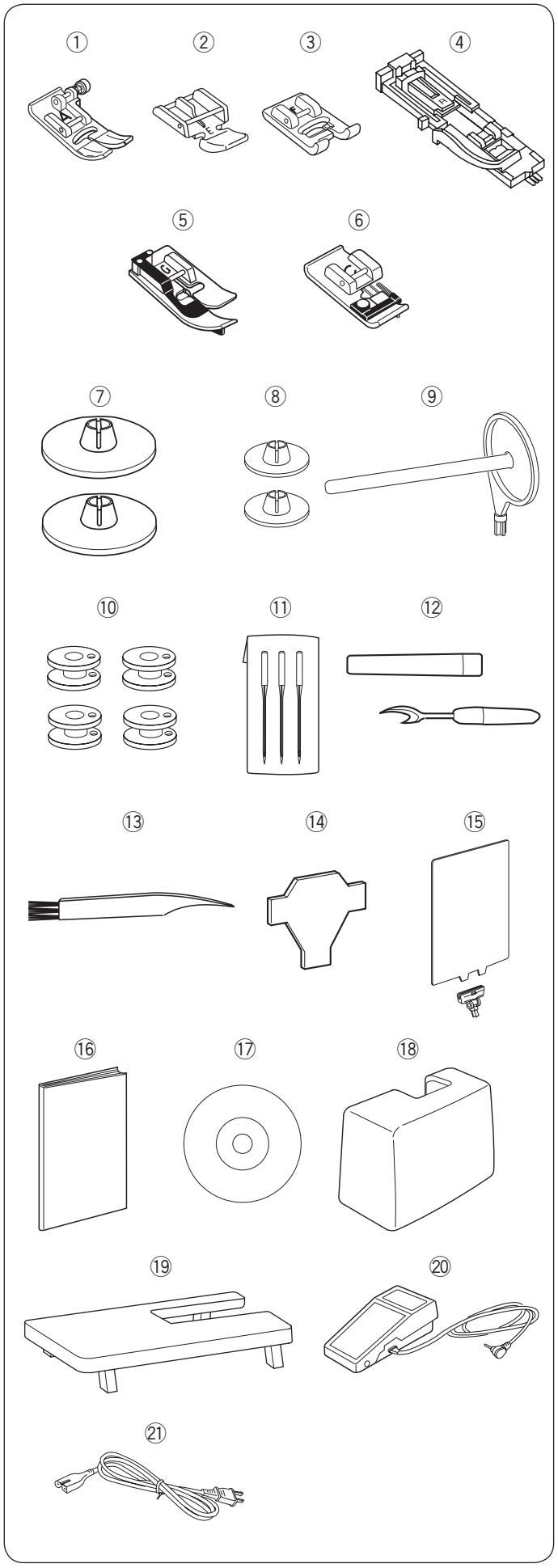

Standard Accessories

① Zigzag foot: A (set on the machine)
② Zipper foot: E
③ Satin stitch foot: F
④ Automatic buttonhole foot: R
⑤ Blind hem foot: G
⑥ Overedge foot: C
⑦ Spool holder (x 2) (large) (1 set on the machine)
⑧ Spool holder (x 2) (small)
⑨ Extra spool pin
⑩ Bobbins (x 4) (1 set on the machine)
⑪ Needle set
⑫ Seam ripper (Buttonhole opener)
⑬ Lint brush
⑭ Screwdriver
⑮ Stitch chart
⑯ Instruction book
⑰ Instructional DVD
⑱ Hard cover
⑲ Large extension table
⑳ Foot control
㉑ Power cable*

* The power cable included may differ from the illustration.

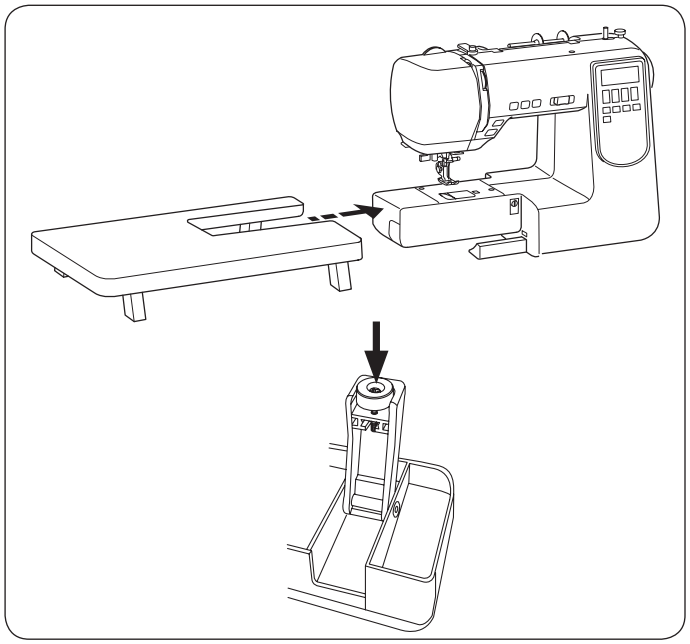

Large Extension Table

Attaching the table

Pull the table away from the machine.

Spread the legs of large extension table.

Holding the table with both hands and slide it gently to the right.

Adjust the table height

Turn setscrews of the table legs with a screwdriver (optional).

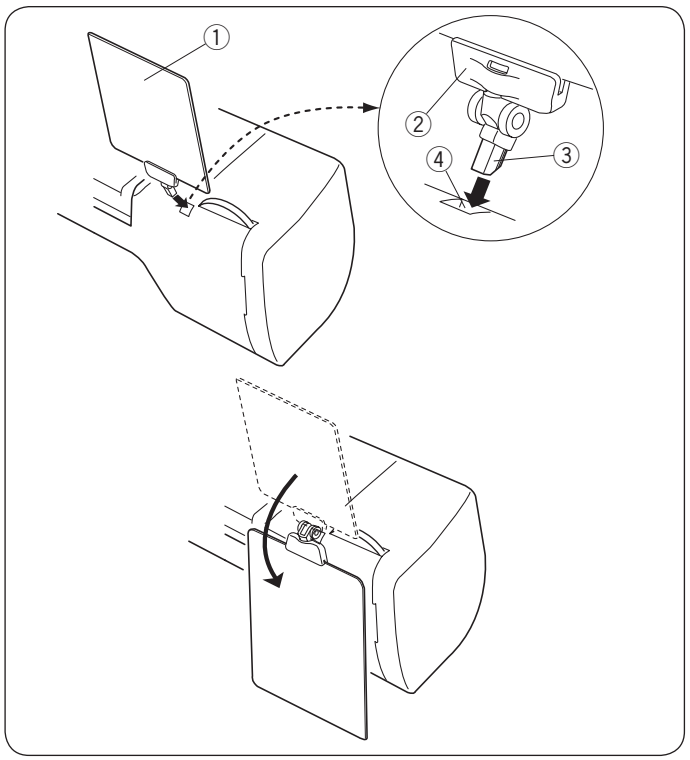

Stitch Chart

Insert the stitch chart ① into the chart holder ②.

Insert the pin ③ into the hole for the stitch chart ④.

① Stitch chart
② Chart holder
③ Pin
④ Hole for stitch chart

You can flip the chart to the back of the machine when it is not in use.

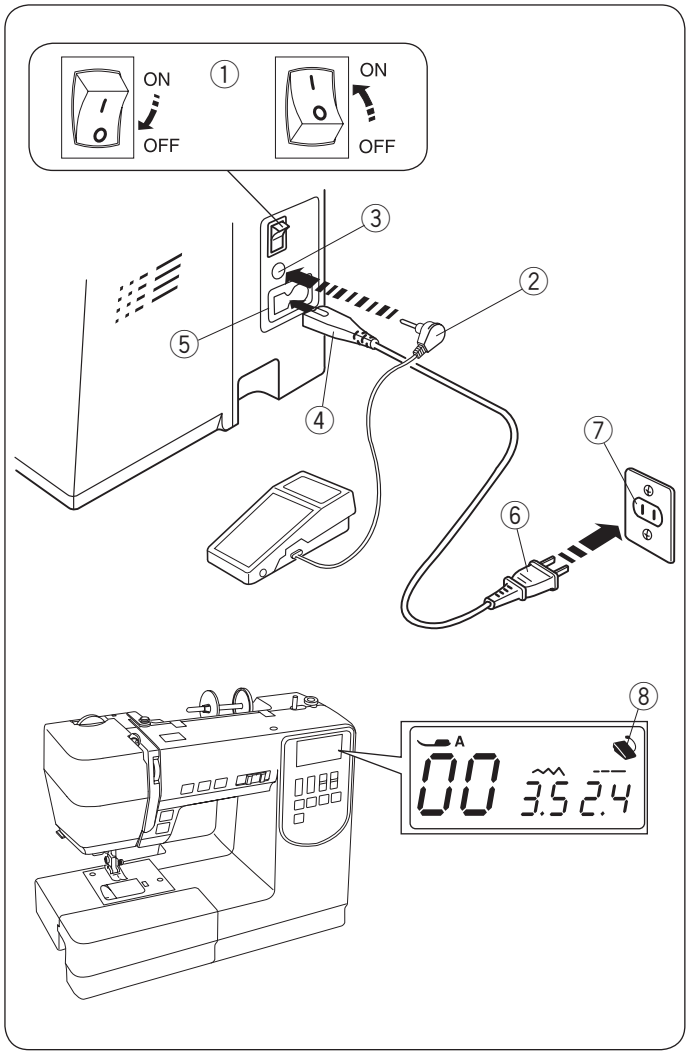

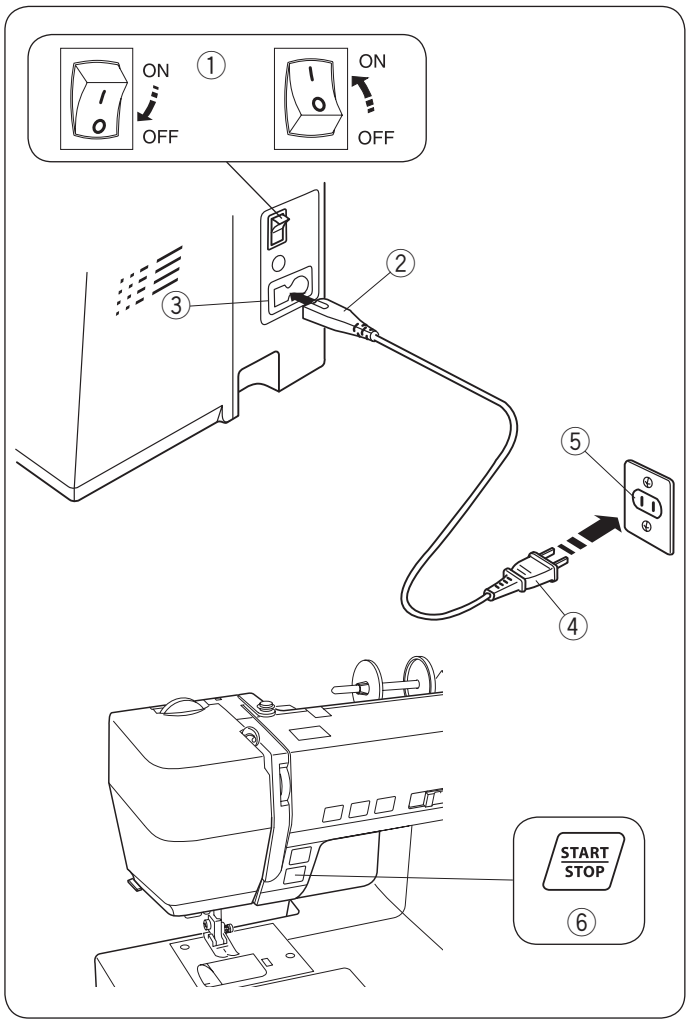

GETTING READY TO SEW

Connecting the Power Supply

Using the foot control

Turn off the power switch.
Insert the pin connector into the jack.
Insert the machine plug into the power inlet.
Insert the power supply plug into the wall outlet.
Turn on the power switch.

① Power switch
② Pin connector
③ Jack
④ Machine plug
⑤ Power inlet
⑥ Power supply plug
⑦ Wall outlet

The foot control sign will be displayed when the foot control is connected to the machine.

⑧ Foot control sign

⚠ WARNING:
While in operation, always keep your eyes on the sewing area and do not touch any moving parts such as the thread take-up lever, handwheel or needle.
Always turn off the power switch and unplug from the power supply:
- when leaving the machine unattended.
- when attaching or removing parts.
- when cleaning the machine.

Do not place anything on the foot control.

Before Using Your Sewing Machine

Before using your sewing machine for the first time, place a scrap of fabric under the presser foot and run the machine without thread for a few minutes. Wipe away any oil which may appear.

Using the start/stop button

Turn off the power switch.
Insert the machine plug into the power inlet.
Insert the power supply plug into the wall outlet.
Turn on the power switch.

① Power switch
② Machine plug
③ Power inlet
④ Power supply plug
⑤ Wall outlet
⑥ Start/Stop button

NOTE:
The start/stop button does not work when the foot control is connected.

Operating Instructions:

The symbol “O” on the switch indicates the “off” position of the switch.
Foot control model 21371 or YC-485EC-1 is used with this sewing machine.

For the U.S.A and Canada only:
For appliances with a polarized plug (one blade wider than the other): To reduce the risk of electric shock, this plug is intended to fit in a polarized outlet only one way. If it still does not fit, contact a qualified electrician to install the proper outlet. Do not modify the plug in any way.

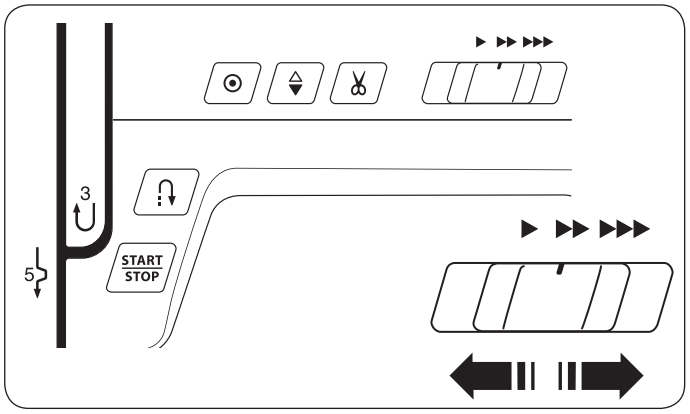

Controlling Sewing Speed

Speed control slider

Sewing speed can be varied by the speed control slider according to your sewing needs.

To increase sewing speed, move the slider to the right.

To decrease sewing speed, move the slider to the left.

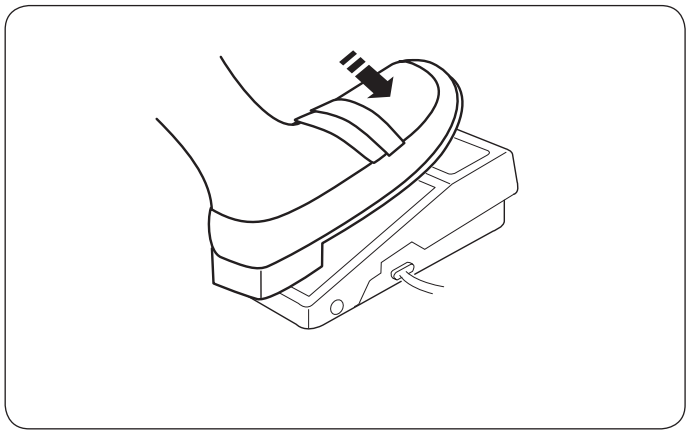

Foot control

Depress the foot control to start the machine.

The further down you press on the foot control, the faster the machine runs.

The maximum sewing speed can be varied by the speed control slider.

NOTE:
The machine will not run and the presser foot mark will blink if you start the machine with the presser foot in the up position. Lower the presser foot and press the foot control.

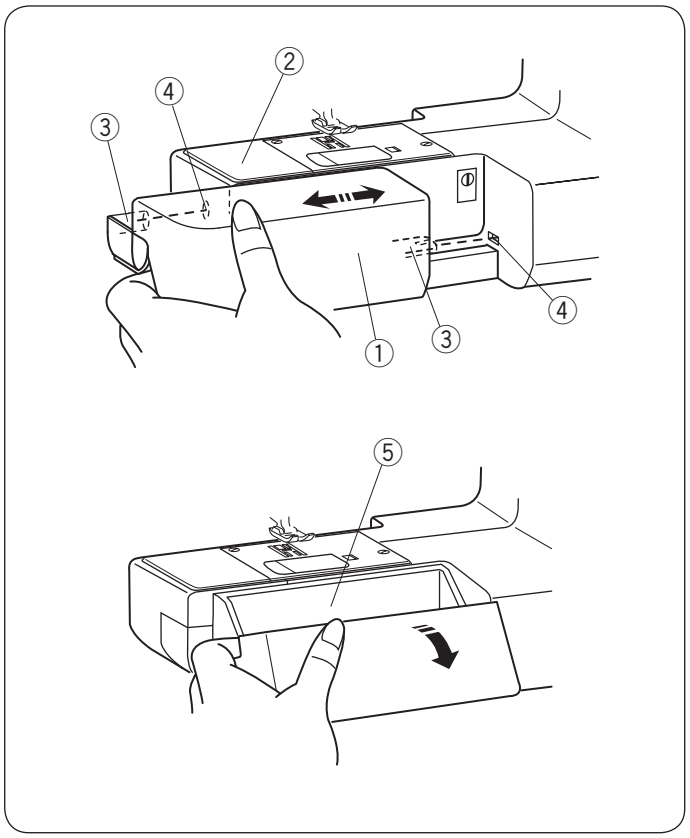

Extension Table

The extension table provides an extended sewing area and can be easily removed for free-arm sewing.

Detaching the table

Pull the table away from the machine, as illustrated.

① Extension table

Attaching the table

Slide the extension table along the free-arm and insert the guides into the holes until the table snaps into the machine.

② Free-arm
③ Guide
④ Hole

Accessory storage

Accessories are stored inside the extension table.
Pull the lid toward you to open the accessory storage ⑤.

⑤ Accessory storage

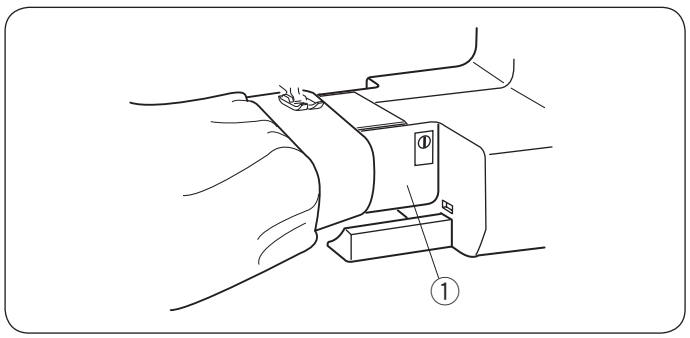

Free-arm Sewing

Free-arm is useful for sewing tubular garments and for darning knee or elbow areas.

① Free-arm

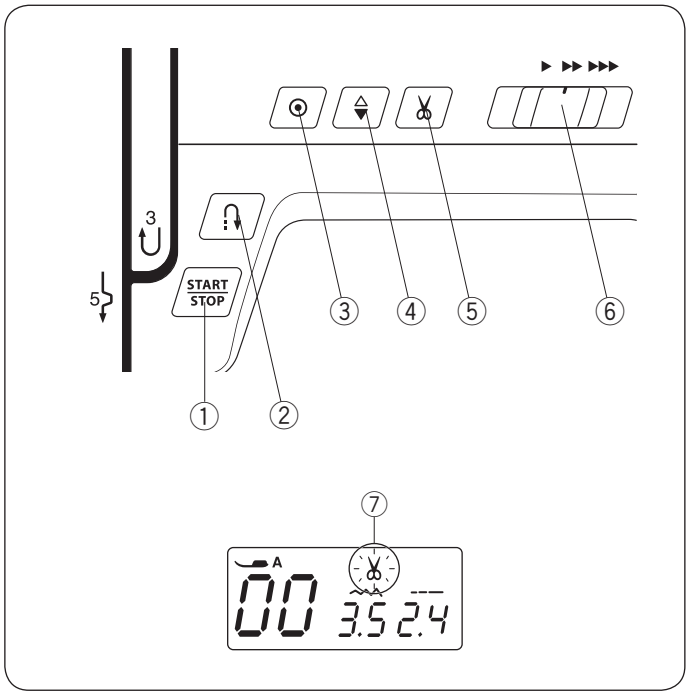

Machine Operating Buttons

① Start/Stop button

Press this button to start or stop the machine.
The machine starts running slowly for the first few stitches, and it then runs at the speed set by the speed control slider.
The machine runs slowly as long as this button is being pressed.

NOTE:
- The start/stop button cannot be used when the foot control is connected to the machine.
- The machine will not run and the presser foot mark will blink if you start the machine with the presser foot in the up position. Lower the presser foot and press the start/stop button.

② Reverse button

- **When stitch pattern 00, 03, 06, 07, 08 or 55 is selected;**
  The machine will sew in reverse as long as the reverse button is pressed. Release the button to sew forward.
  When the machine is stopped and foot control is disconnected, the machine will sew in reverse slowly as long as the reverse button is pressed. Release the button to stop the machine.
- **When any other stitches are selected;**
  If you press the reverse button when sewing any other patterns, the machine will immediately sew locking stitches and automatically stop.

NOTE:
There will be particular functions of the reverse button when pattern 01, 02, 25 or 26 is selected.
Refer to page 24, 37 and 38 for instructions.

③ Auto-lock button

- **When stitch pattern 00, 03, 06, 07, 08 or 55 is selected;**
  Press the auto-lock button to sew a locking stitch immediately. The machine will automatically stop.
- **When any other stitches are selected;**
  Press the auto-lock button to sew a locking stitch at the end of current pattern. The machine will automatically stop.

④ Needle up/down button

Press the needle up/down button to bring the needle up or down.

⑤ Thread cutter button

Press the thread cutter button to trim the threads after sewing.
The thread cutter mark will blink ⑦ while the machine cuts the threads.

⑥ Speed control slider

Maximum sewing speed can be adjusted with the speed control slider. Refer to page 7.

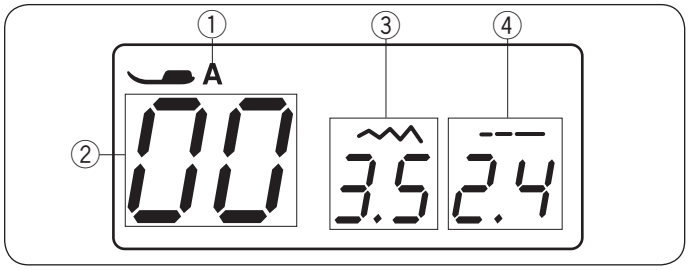

LCD Display

The LCD display shows following information when the machine is turned on.

① Identification letter of the recommended foot
② Stitch pattern number
③ Stitch width
④ Stitch length

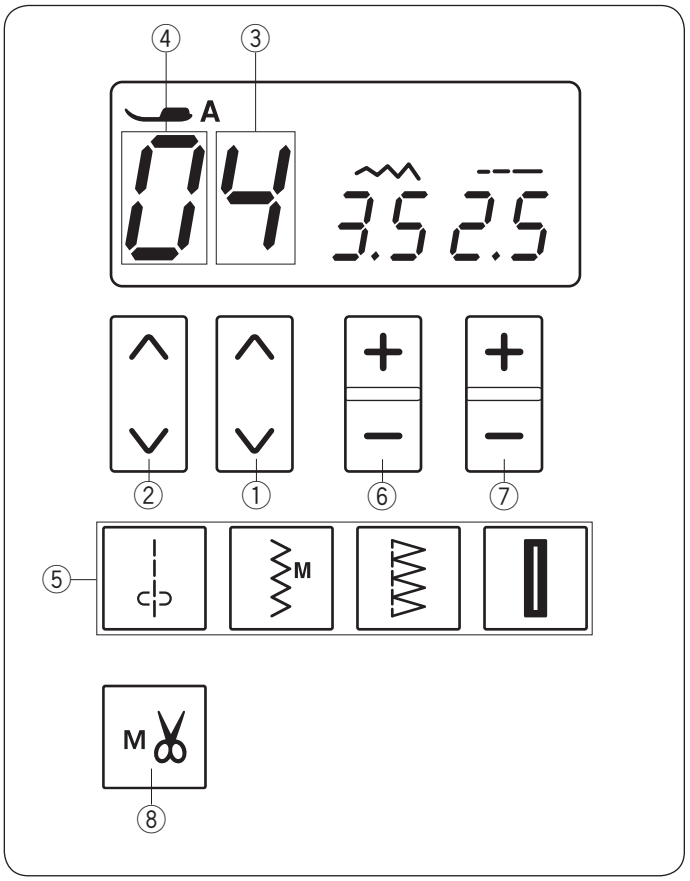

Function Keys

Selecting the Stitch Patterns

To select the desired stitch pattern, press the arrow keys (① and ②) until the pattern number of the desired stitch is indicated.

To change the first digit ③ of the stitch pattern number, press the arrow keys ① under the first digit of the pattern number.

To change the second digit ④ of the stitch pattern number, press the arrow keys ② under the second digit of the pattern number.

① Arrow keys (first digit)
② Arrow keys (second digit)
③ First digit
④ Second digit

Direct pattern selection

You can select stitch patterns 00, 06, 09 and 18 directly by pressing the corresponding direct pattern selection key ⑤.

The stitch image of stitch pattern are indicated on each key.

Stitch width adjusting key

Press “+” or “–” ⑥ to change the stitch width or needle drop position, depending on the selected stitch pattern. Refer to pages 23, 26 and 32.

Stitch length adjusting key

Press “+” or “–” ⑦ to change the stitch length of the selected pattern. You can also adjust the buttonhole density, the evenness of darning, and the size of eyelet with this key. Refer to pages 23, 26 and 32.

Thread cut memory key

To cut the threads automatically after locking stitches, press the thread cutter memory key ⑧ (Refer to page 21).

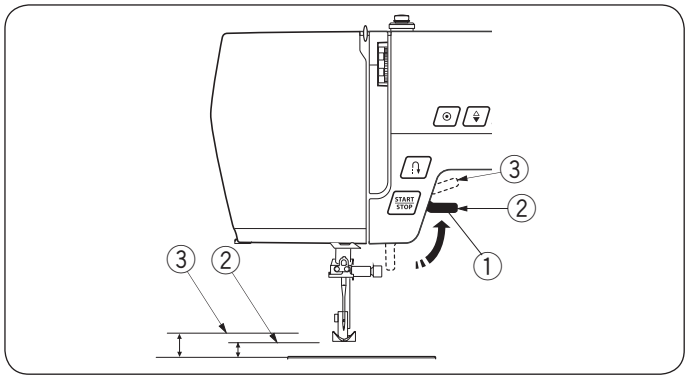

Presser Foot Lifter

The presser foot lifter raises and lowers the presser foot.

You can raise the foot about 1/4″ (0.7 cm) higher than the normal up position for easy removal of the presser foot, or to help you place thick material under the foot.

① Presser foot lifter
② Normal up position
③ Highest position

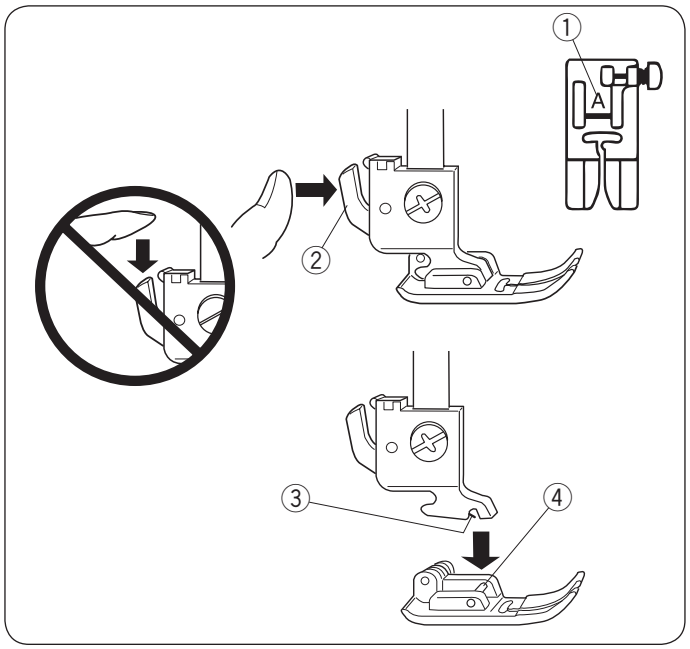

Changing the Presser Foot

⚠ CAUTION:
Turn OFF the power switch before changing the foot. Always use the proper foot for the selected pattern. The wrong foot can cause the needle to break. Each foot is marked with an identification letter.
① Identification letter

Removing the presser foot

Raise the needle to its highest position by turning the handwheel counterclockwise. Raise the presser foot, and press the lever on the back of the foot holder.
② Lever

Attaching the presser foot

Place the selected presser foot so that the pin on the foot lies just under the groove in the foot holder.
Lower the presser bar to lock the foot into the place.
③ Groove
④ Pin

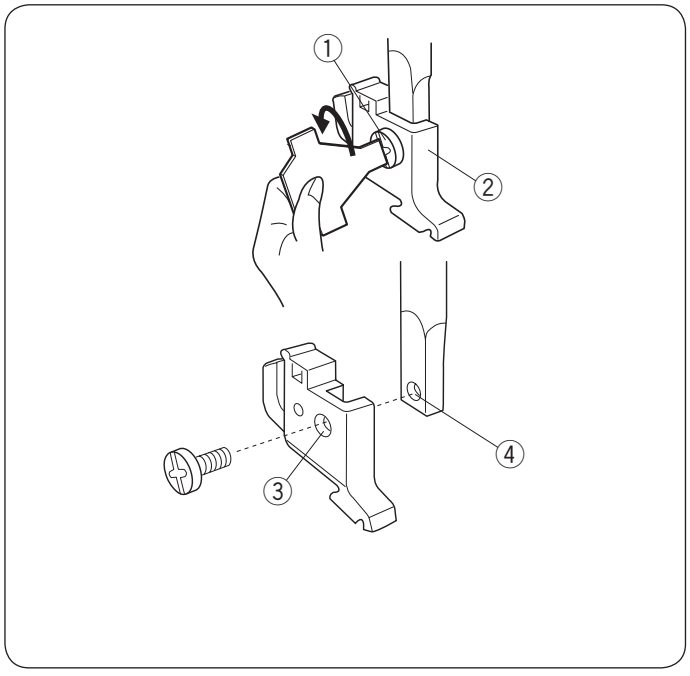

Removing and Attaching the Foot Holder

⚠ CAUTION:
Turn OFF the power switch before detaching or attaching foot holder.

Removing the foot holder

Remove the setscrew by turning it counterclockwise with a screwdriver.

Attaching the foot holder

Align the hole in the foot holder with the threaded hole in the presser bar.

Fit the setscrew into the hole.

Tighten the setscrew by turning it clockwise with the screwdriver.

① Setscrew
② Foot holder
③ Hole
④ Threaded hole

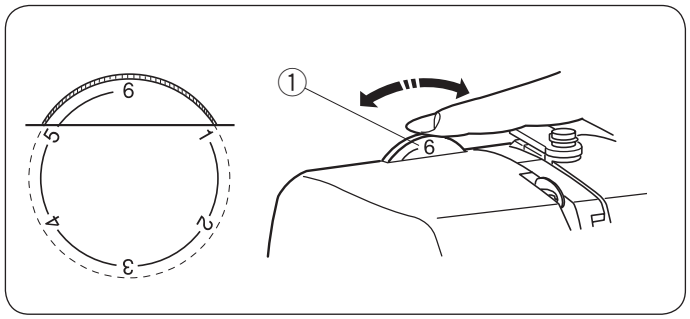

Presser Foot Pressure Dial

Foot pressure can be adjusted by turning the presser foot pressure dial.
Set the pressure between “3” and “6” for ordinary fabrics.
Set the pressure between “1” and “3” for fine fabrics and applique sewing.
Set the pressure between “5” and “6” for heavyweight fabrics.
① Presser foot pressure dial

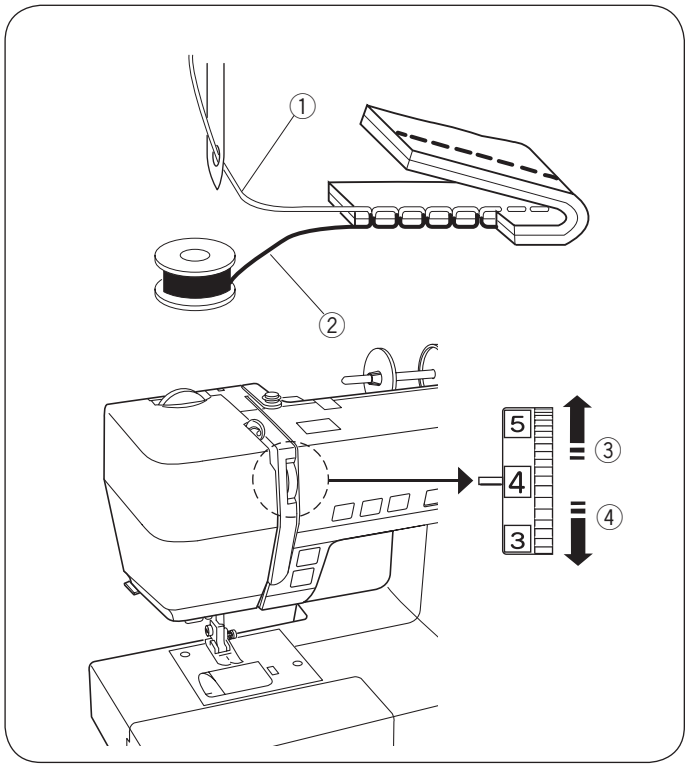

Adjusting the Needle Thread Tension

Straight stitch balanced tension

The ideal straight stitch has threads locked between two layers of fabric, as illustrated (magnified to show detail).

If you look at the top and bottom of the seam, notice that the stitches are evenly balanced.

① Needle thread (top thread)
② Bobbin thread (bottom thread)
③ To loosen
④ To tighten

When adjusting the needle thread tension, the higher the number, the tighter the top thread tension.

Results depend on:

- stiffness and thickness of the fabric
- number of fabric layers
- type of stitch

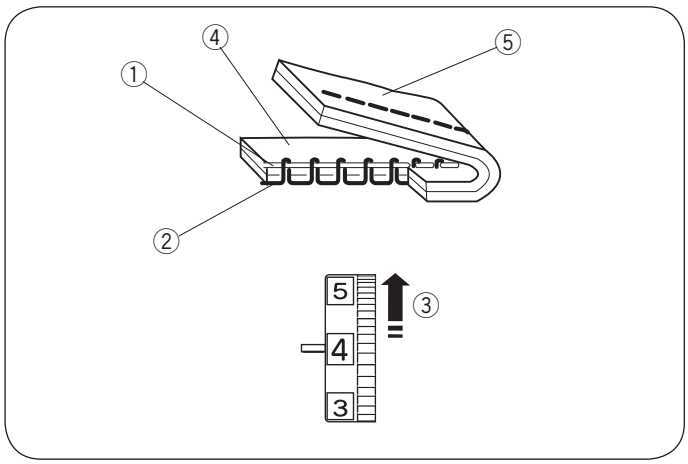

Tension is too tight

The bobbin thread shows through on the right side of the fabric, and the stitch feels bumpy. Turn the dial to a lower number to loosen the needle thread tension.

① Needle thread (top thread)
② Bobbin thread (bottom thread)
③ To loosen tension
④ Right side (top side) of fabric
⑤ Wrong side (bottom side) of fabric

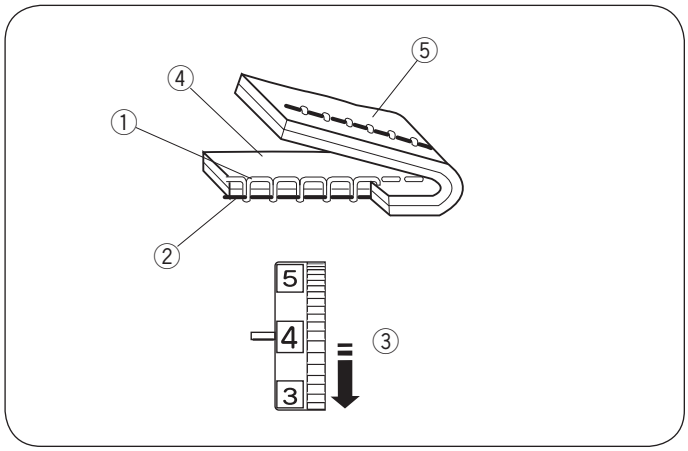

Tension is too loose

The needle thread shows through on the wrong side of the fabric, and the stitch feels bumpy. Turn the dial to a higher number to tighten the needle thread tension.

① Needle thread (top thread)
② Bobbin thread (bottom thread)
③ To tighten tension
④ Right side (top side) of fabric
⑤ Wrong side (bottom side) of fabric

Zigzag stitch

For an ideal zigzag stitch, the bobbin thread does not show on the right side (top side) of the fabric, and the needle thread shows slightly on the wrong side (bottom side) of the fabric.

See the illustrations for the correct appearance.

To match this appearance, adjust the needle tension as necessary.

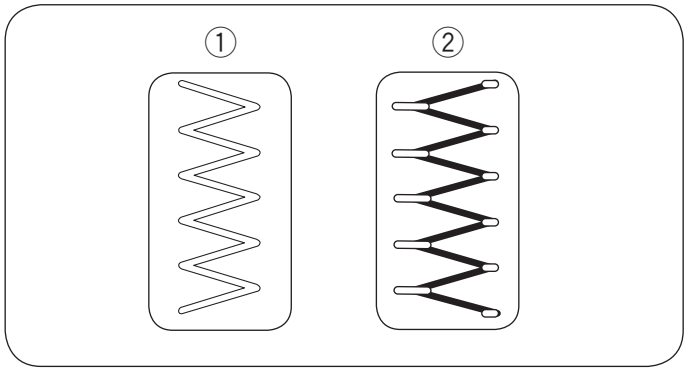

Balanced tension

Minimize the amount of needle thread visible on the wrong side (bottom side) of the fabric without causing excessive puckering, or causing the bobbin thread to show on the right side (top side) of the fabric.

Results vary with fabric, thread and sewing conditions.

① Right side (top side) of fabric
② Wrong side (bottom side) of fabric

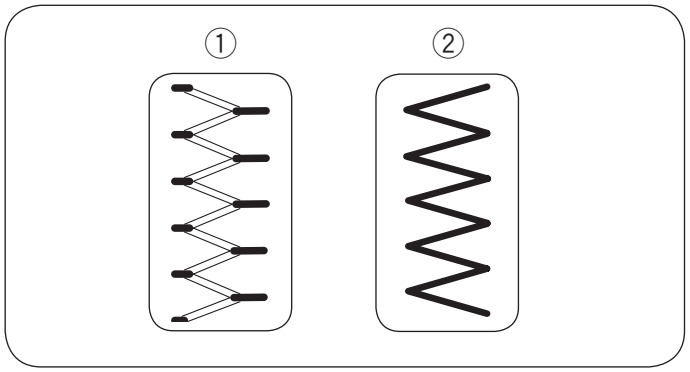

Tension is too tight

The corner of each zigzag pulls together on the right side of the fabric

① Right side (top side) of fabric
② Wrong side (bottom side) of fabric

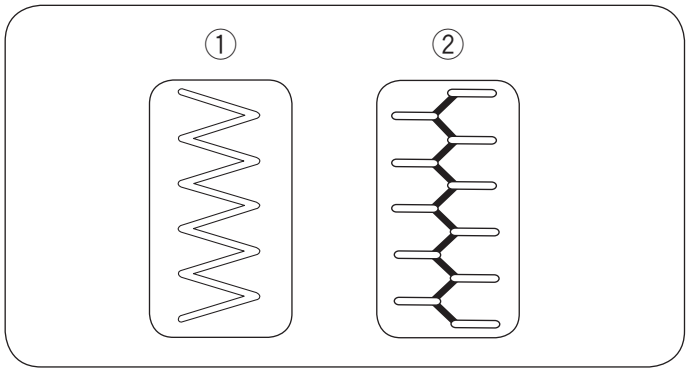

Tension is too loose

The corner of each zigzag point pulls together on the wrong side of the fabric.

① Right side (top side) of fabric
② Wrong side (bottom side) of fabric

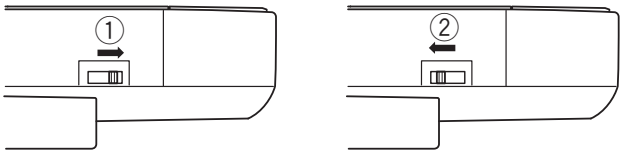

View from the rear

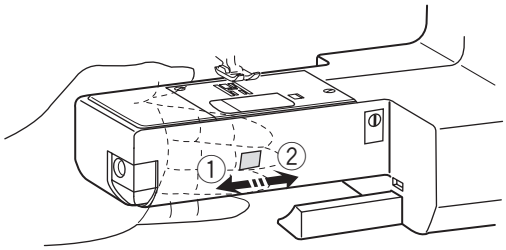

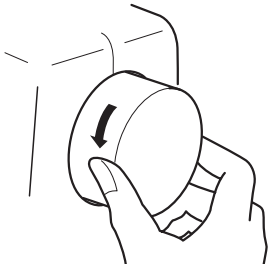

Dropping or Raising the Feed Dog

The drop feed lever is located underneath the free arm bed on the back of the machine.

To drop the feed dog, push the lever in the direction of the arrow ①.

To raise the feed dog, push the lever in the direction of the arrow ②, as illustrated, and turn the handwheel toward you.

The feed dog must be up for normal sewing.

NOTE:
Set the stitch length value at the minimum when lowering the feed dog.

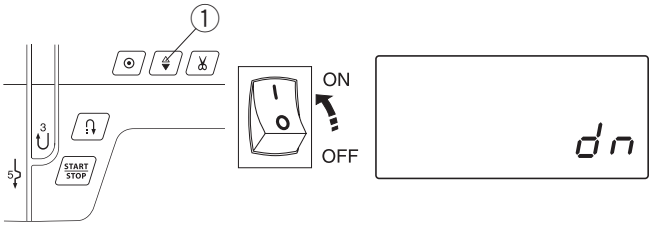

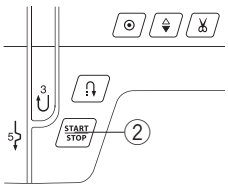

Needle Stop Position Setting

You can set the needle stop position to up or down when the machine stops.

To enter the needle stop position setting mode, turn the power off.
Press and hold the needle up/down button ①, and turn the power switch on. Hold then needle up/down button until the needle stop position setting screen appears as shown.

The default setting is down and “dn” sign appears on the screen.

Press the needle up/down button ①.
The “uP” sign appears and the needle stop position is set to up.

Press the START/STOP button ② to apply the setting.

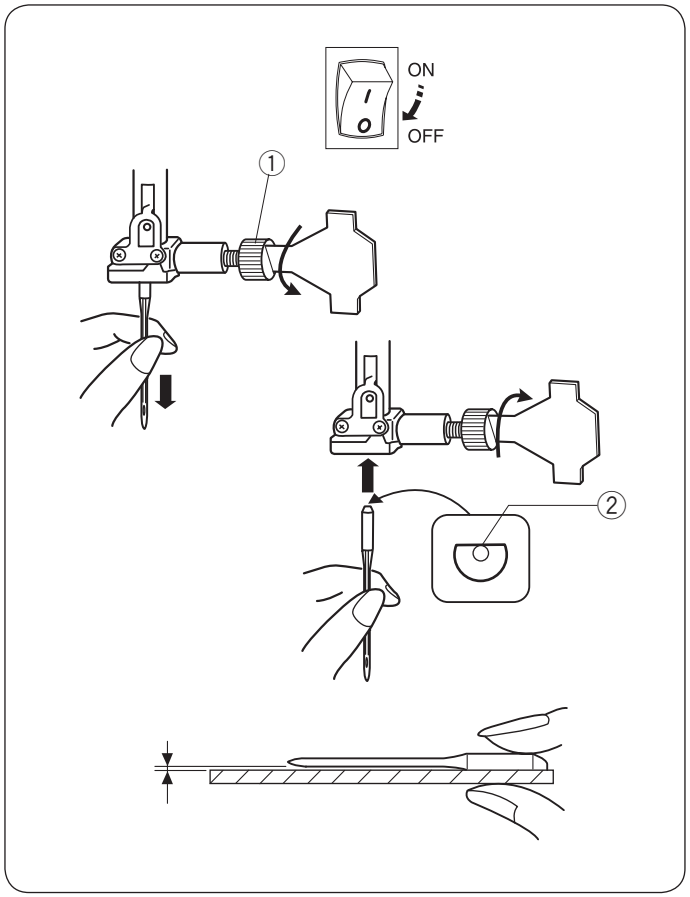

Fabric		Thread	Needle
Fine	Lawn Georgette Tricot Organza Crepe	Silk #80-100 Cotton #80-100 Synthetic #80-100	#9/65-11/75 Blue tip needle
Medium	Sheeting Jersey Broadcloth Fleece	Silk #50 Cotton #50-80 Synthetic #50-80	#11/75-14/90
Heavy weight	Denim Tweed Coating Quilting	Silk #30-50 Cotton #40-50 Synthetic #40-50	#14/90-16/100

NOTE:
1 x blue tip needles (#11/75), 2 x #11/75 needles and 2 x #14/90 needles are included in the needle case (Part No. 540401026).

Changing the Needle

⚠ CAUTION:
Turn OFF the power switch before changing the needle.
Raise the needle to its highest position by turning the handwheel counterclockwise, and lower the presser foot.
A loose needle or a loose screw may cause machine malfunction or needle to break.

Loosen the needle clamp screw by turning it counterclockwise. Remove the needle from the needle clamp.

Insert a new needle into the needle clamp with the flat side to the rear. When inserting the needle into the needle clamp, push it up as far as it will go.

Tighten the needle clamp screw firmly by turning it clockwise.

① Needle clamp screw
② Flat side

To see if the needle is in good condition, place the flat side of the needle onto something flat (needle plate, glass etc.). The gap between the needle and the flat surface should be consistent. Never use a bent or blunt needle.

A damaged needle can cause permanent snags or runs in knits, fine silks and silk-like fabrics.

Fabric and Needle Chart

- For general sewing, use needle size 11/75 or 14/90.
- A fine thread and needle should be used for sewing lightweight fabrics, so the fabric will not be marred.
- Heavy fabrics require a needle large enough to pierce the fabric without fraying the needle thread.
- Always test the needle size on a small scrap of the fabric that will be used for actual sewing.
- In general, use the same thread for the needle and bobbin.
- When sewing stretch fabrics, very fine fabrics and synthetics, use a blue tip needle. The blue tip needle effectively prevents skipped stitches.

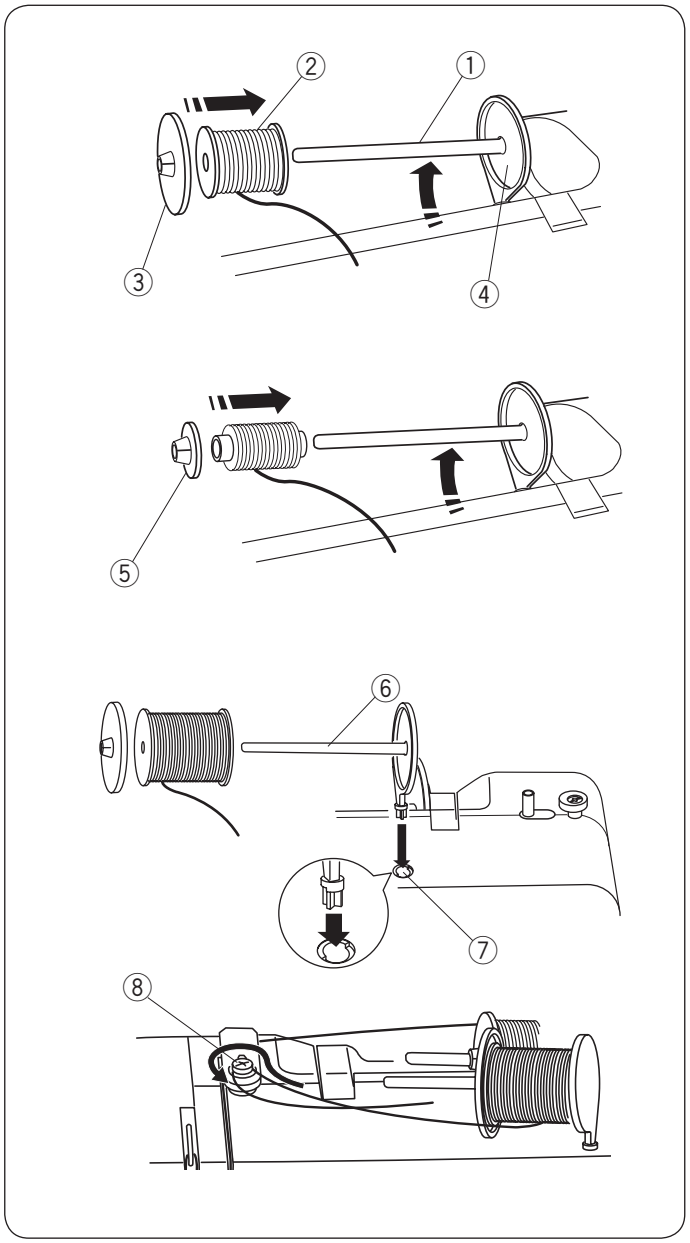

Setting the Spool of Thread

Horizontal spool pin

Lift up the spool pin. Place a spool of thread on the spool pin.

Attach the large spool holder, and press it firmly against the spool of thread so that the spool rests on the supporter.

① Spool pin
② Spool of thread
③ Large spool holder
④ Supporter

The small spool holder is used with narrow or small spools of thread.

⑤ Small spool holder

Extra spool pin

The extra spool pin is for winding bobbins without unthreading the machine.

Insert the extra spool pin into the hole.

The extra spool pin should point to the bobbin winder tension disk.

Draw the thread from the spool and pass the thread around the bobbin winding tension disk as shown.

⑥ Extra spool pin
⑦ Hole for extra spool pin
⑧ Bobbin winder tension disk

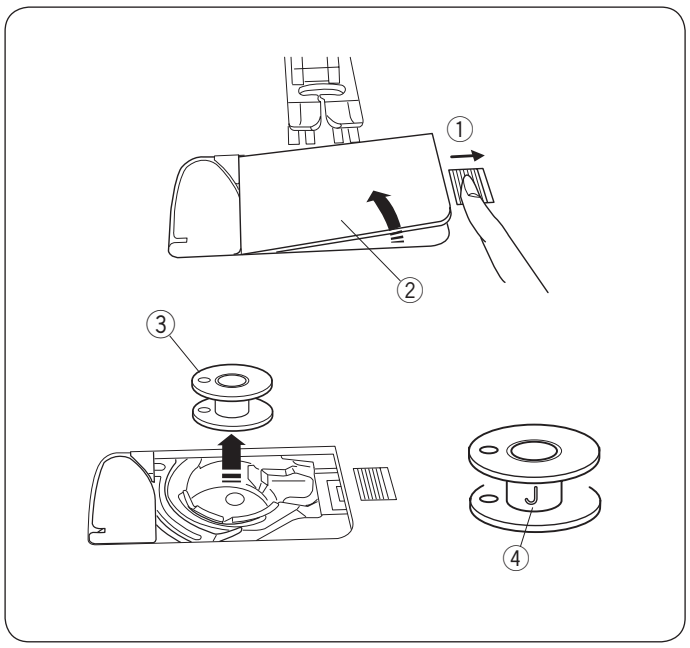

Bobbin Winding

Removing the bobbin

Gently slide the hook cover release button to the right and remove the hook cover plate.
Lift out the bobbin.

① Hook cover release button
② Hook cover plate
③ Bobbin

NOTE:
Use the “J” plastic bobbins for horizontal hook (marked with “J” ④). Using other bobbins, such as pre-wound paper bobbins, may cause stitching problems and/ or damage to the bobbin holder.

Winding the bobbin

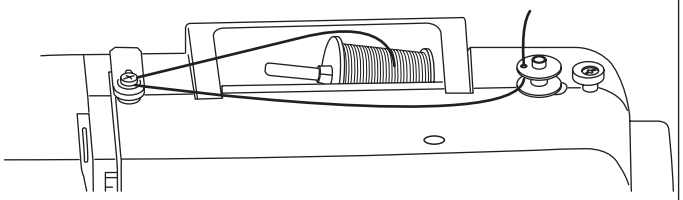

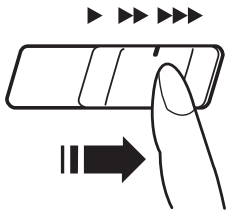

NOTE:
Set the speed control slider at its fastest position for bobbin winding.

1

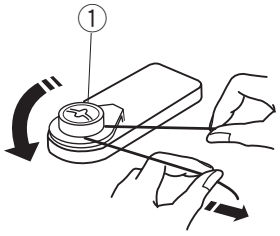

1 Draw the thread from the spool and pass the thread around the bobbin winding tension disk.
① Bobbin winding tension disk

2 3

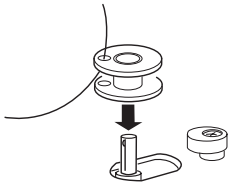

2 Thread through the hole in the bobbin from the inside to the outside.

3 Put the bobbin on the bobbin winder spindle.

4

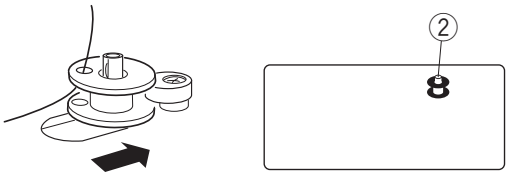

4 Push the bobbin to the right.
The bobbin icon appears on the LCD display.
② Bobbin icon

5

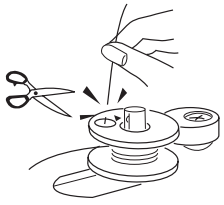

5 With the free end of the thread held in your hand, start the machine. Stop the machine when it has wound a few layers, and then cut the thread close to the hole in the bobbin.

6 7

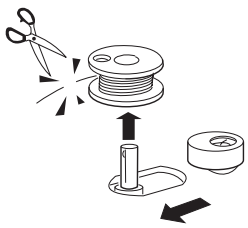

6 Start the machine. When the bobbin is fully wound, it will stop spinning automatically.

Stop the machine and return the bobbin winder to its original position by moving the spindle to the left.

NOTE:
Do not move the bobbin winder spindle while the machine is running.

7 Remove the bobbin. Cut the thread as shown.

Return the speed control slider position.

Inserting the bobbin

⚠ CAUTION:
Turn OFF the power switch before inserting the bobbin and threading the bobbin holder.

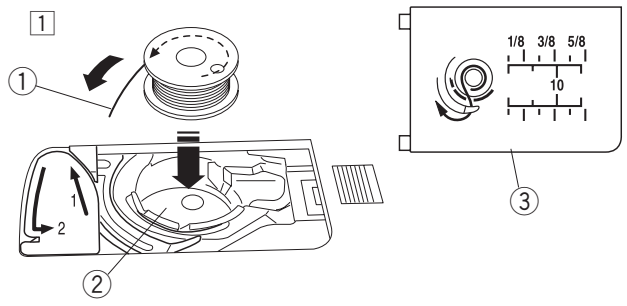

1 Place a bobbin in the bobbin holder with the thread running off counterclockwise as shown on the hook cover plate.
- ① End of thread
- ② Bobbin holder
- ③ Hook cover plate

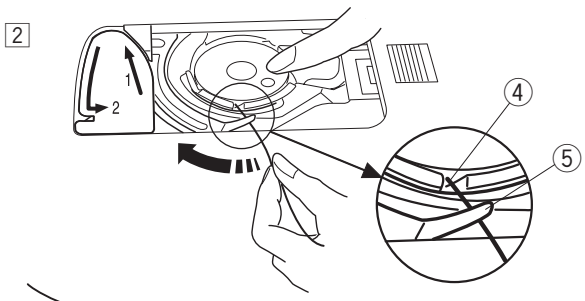

2 Hold the bobbin with your fingertip so it does not rotate.

Guide the thread into the front notch of the bobbin holder.

Pull the thread to the left to pass it under the guide.
- ④ Front notch
- ⑤ Guide

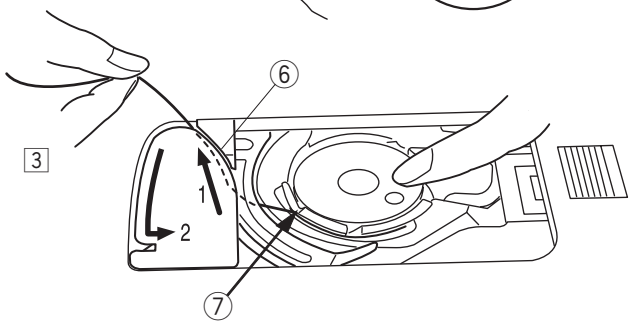

3 Draw the thread to the left to pass it into the guide path marked “1”.

Make sure that the thread comes out from the side notch of the bobbin holder.
- ⑥ Guide path 1
- ⑦ Side notch

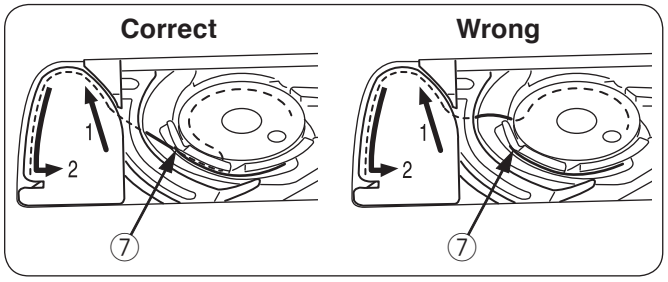

NOTE:
If the thread does not come out from the side notch, rethread from step 1.

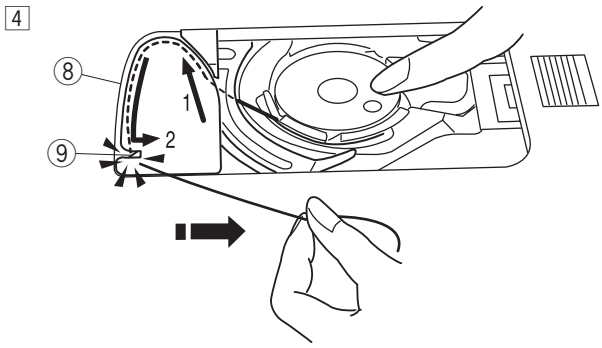

4 Continue to draw the thread along the guide path marked “2” and pull the thread to the right through the slit. The thread will be cut to a proper length and held in place.
- ⑧ Guide path 2
- ⑨ Slit (Thread cutter)

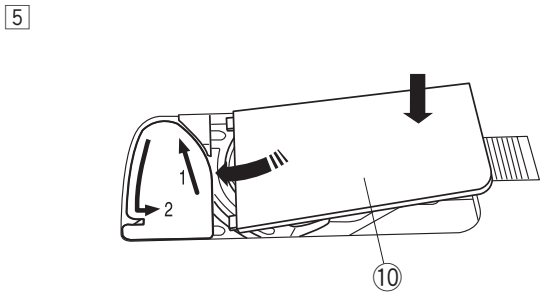

5 Set the left edge of the hook cover plate into opening. Push down the hook cover plate to fit in place.
- ⑩ Hook cover plate

NOTE:
Unless otherwise noted, you can start sewing without drawing up the bobbin thread.
Refer to page 20 for how to draw up the bobbin thread.

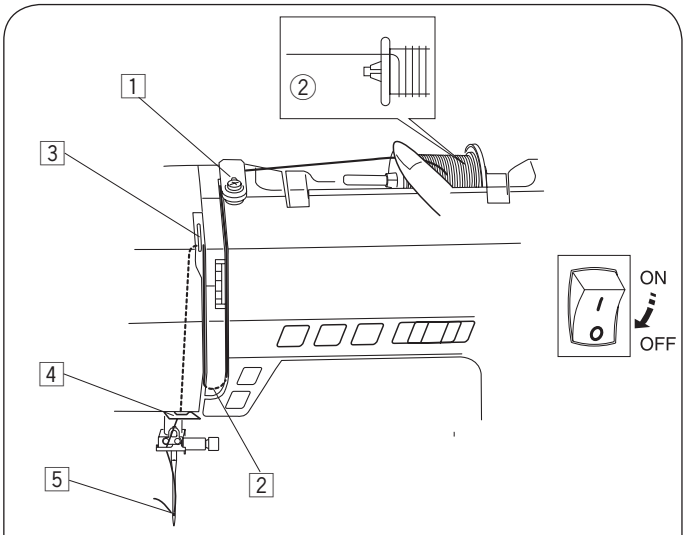

Threading the Machine

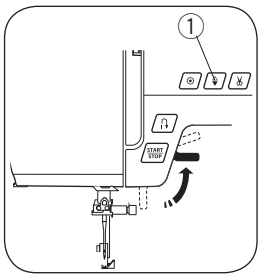

Raise the presser foot. Press the needle up/down button ① to raise the thread take-up lever to its highest position.

① Needle up/down button

⚠ CAUTION:
Turn OFF the power switch before threading the machine.

1

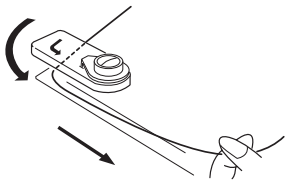

1 Turn the power switch off.
Draw the end of the thread around the upper thread guide.

2

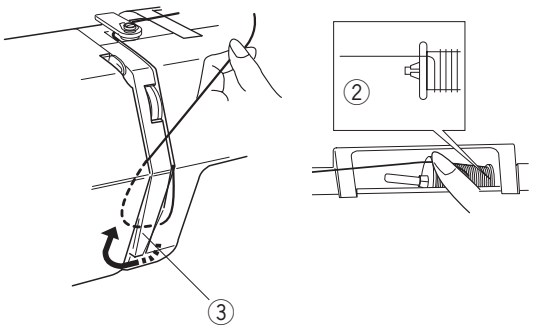

2 While holding the thread near the spool ②, draw the end of the thread down around the check spring holder ③.
② Spool
③ Check spring holder

3

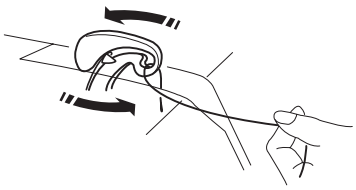

3 Firmly draw the thread up from right to left over the take-up lever, and down into the take-up lever eye.

4 5

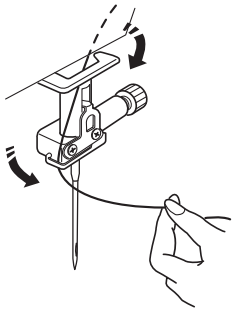

4 Pass the thread through the lower thread guide. Slide the thread behind the needle bar thread guide on the left.

5 Use the needle threader to thread the needle (see page 19).

Needle Threader

⚠ CAUTION:
Turn off the power switch when using the needle threader.

1

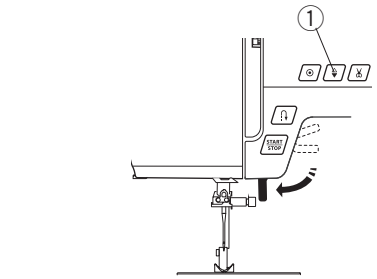

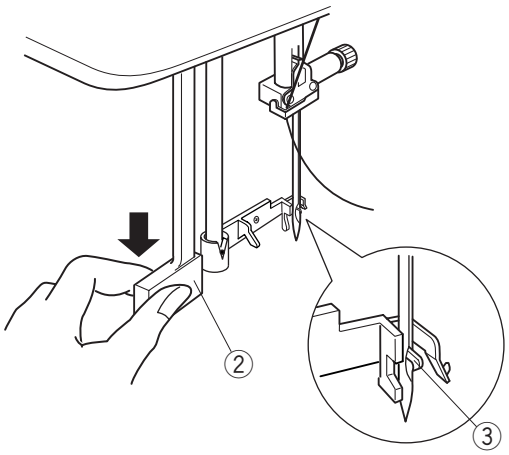

1 Lower the presser foot. Press the needle up/down button ① to raise the needle to its highest position.

Turn the power switch off.

Pull down the needle threader knob as far as it will go. The hook comes out through the needle eye from behind.

① Needle up/down button
② Knob
③ Hook

2 3

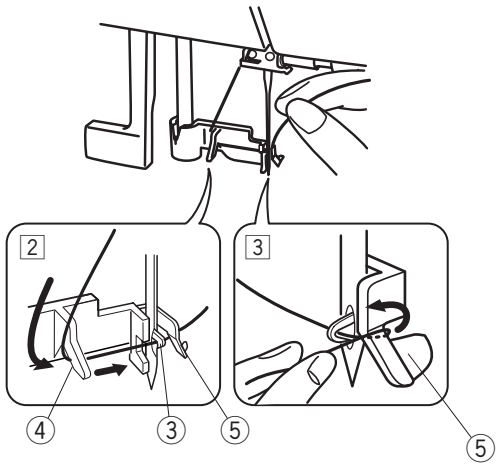

2 Draw the thread from the left guide to the right guide and under the hook.

④ Left guide
⑤ Right guide

3 Draw the thread to the front along the right side of the right guide.

4

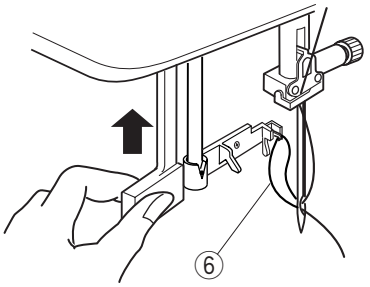

4 Raise the knob in the direction of the arrow, drawing the thread loop through the needle.

⑥ Thread loop

5

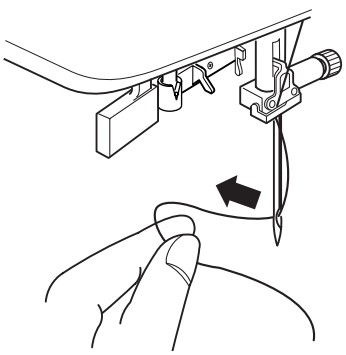

5 Pull the thread through the needle eye.

NOTE:
The needle threader can be used with a #11 to #16 needle or a blue tip needle. Thread sizes 50 to 90 are recommended.

Drawing up the Bobbin Thread

1 Raise the presser foot. Hold the needle thread lightly with your left hand.

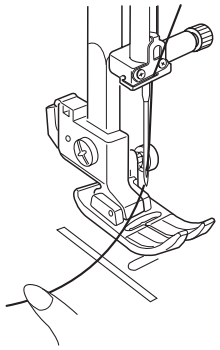

2 Turn the power switch on.

Press the needle up/down button twice to lower and raise the needle to pick up the bobbin thread.

① Needle up/down button

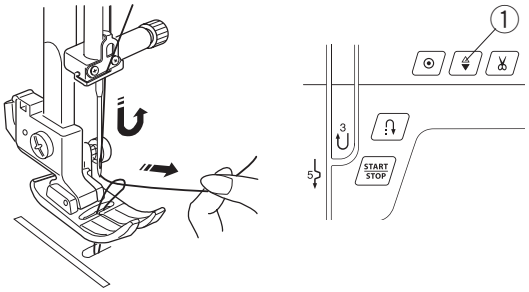

3 Pull both threads 4″ to 6″ (10 to 15 cm) under and behind the presser foot.

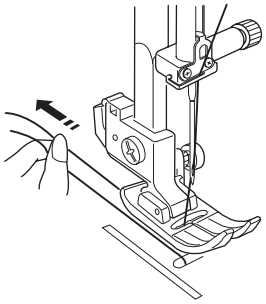

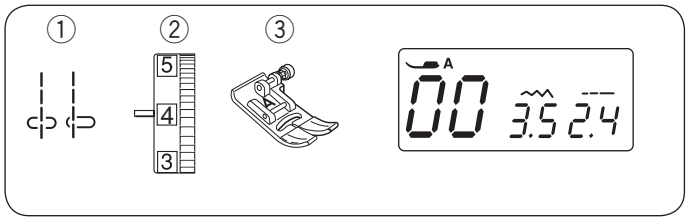

BASIC SEWING

Straight Stitch Sewing

① Stitch pattern: 00 or 03
② Needle thread tension: 2 to 6
③ Presser foot: Zigzag foot A

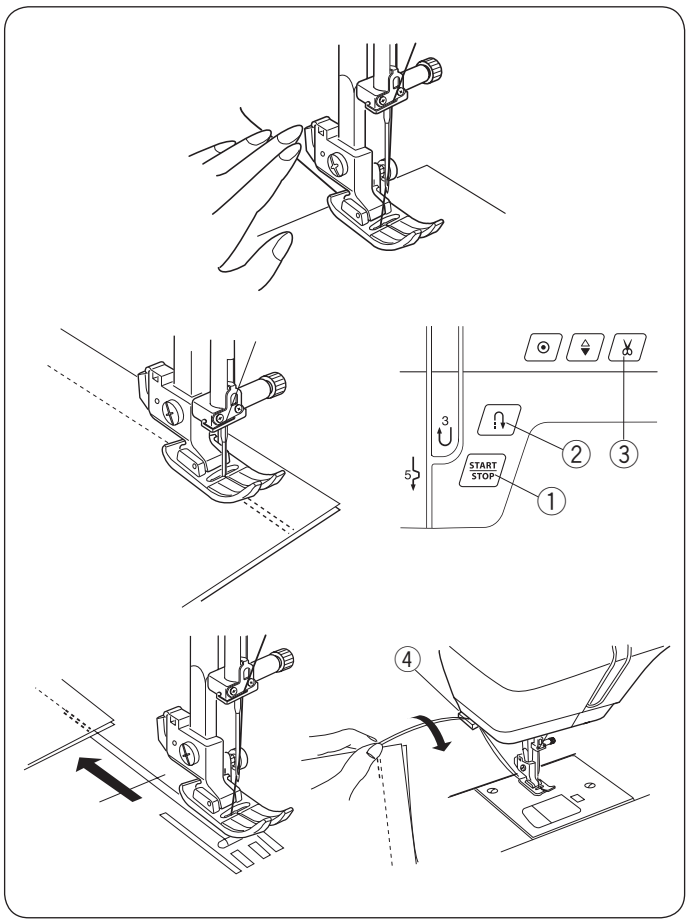

NOTE:
When sewing with the satin stitch foot F or buttonhole foot R, pull the thread to the left to hold the thread.

Starting to sew

Raise presser foot and position the fabric next to a seam guide line on the needle plate. Lower the needle to the point where you want to start.

Pull the thread toward the rear and lower the presser foot.

Press the start/stop button or depress the foot control to start sewing.

Gently guide the fabric along a seam guide line letting the fabric feed naturally.

① Start/stop button

Securing seam

To secure the end of seam, press the reverse button and sew several reverse stitches.

Press the thread cutter button to cut the threads.

② Reverse button
③ Thread cutter button

Use the thread cutter on the face cover to cut thicker threads.

④ Thread cutter

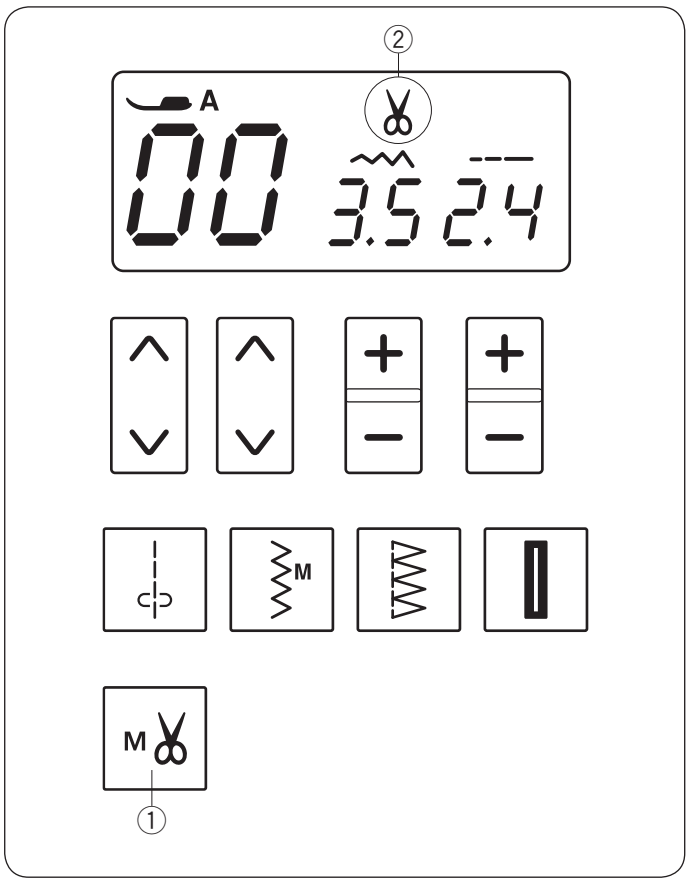

Auto Thread Cutting

To cut the threads automatically after locking stitches, press the thread cutter memory key.

The thread cutter icon appears on the LCD display.

① Thread cutter memory key
② Thread cutter icon

When buttonhole, tacking, darning 18 19 20 21 22 23 24 25 26 27 or eyelet is selected, the machine will cut the threads automatically after sewing is finished.

Press the auto-lock button or reverse button to cut the threads automatically after locking stitches when other stitch is selected.

NOTE:
Use the thread cutter on the face cover if the thread is 30 or thicker.

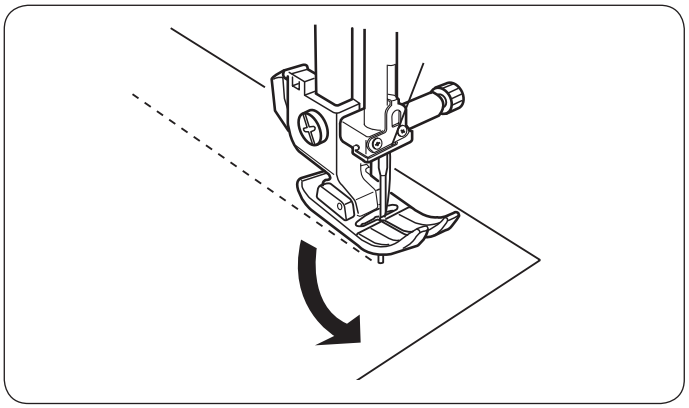

Changing Sewing Direction

Stop the machine.
Raise the presser foot.
Pivot the fabric around the needle to change the sewing direction as desired.
Lower the foot and start sewing in a new direction.

NOTE:
Lower the needle by pressing needle up/down button if the needle stop position is set at up position.

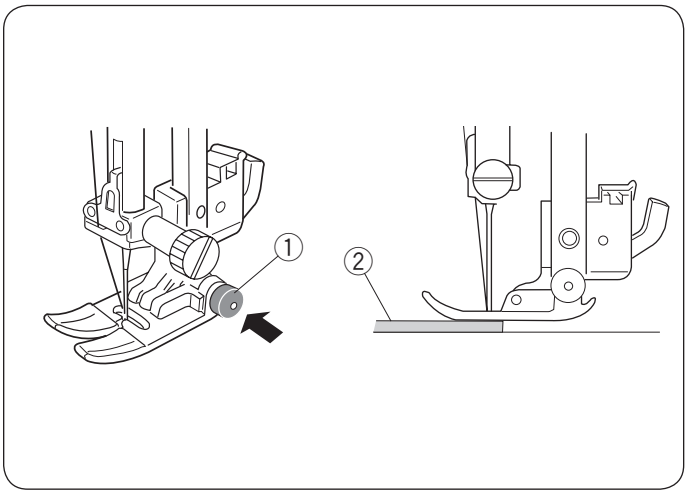

Sewing from the Edge of Thick Fabric

The black button on the zigzag foot locks the foot in the horizontal position.

This is helpful when starting sewing from the far edge of thick fabrics or sewing across a hem.

Lower the needle into the fabric at the point where you wish to start sewing.

Lower the foot while pushing the black button in. The foot is locked in the horizontal position to avoid slipping.

The button is released automatically after sewing a few stitches.

① Black button
② Thick fabrics

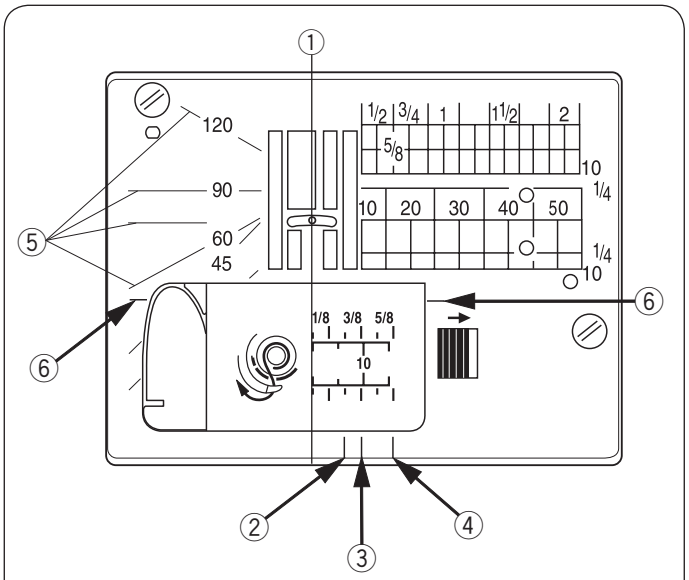

Using Seam Guides

The seam guides on the needle plate and the hook cover plate help you to measure seam allowance.
The numbers on the needle plate indicate the distance from the center needle position in inches and millimeters.

① Center needle position

The front seam guides are marked at 1/4″, 3/8″ and 5/8″ from the center needle position.

② Front seam guide at 1/4″
③ Front seam guide at 3/8″
④ Front seam guide at 5/8″

The angle scales are marked at 45, 60, 90 and 120 degrees.

⑤ Angle scales
⑥ Cornering guide

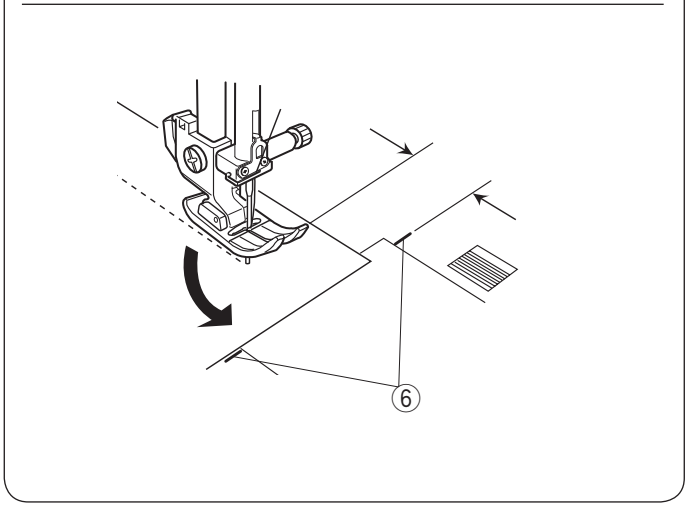

Turning Square Corners

When sewing with fabric edge at 5/8″ seam guide, to turn a square corner so that sewing continues at same distance from edge.
Stop the machine when front edge of fabric reaches the cornering guide lines ⑥.
Raise the presser foot and turn the fabric counterclockwise 90°.
Lower the presser foot, and begin stitching in the new direction.

⑥ Cornering guide

NOTE:
Lower the needle by pressing needle up/down button if the needle stop position is set at up position.

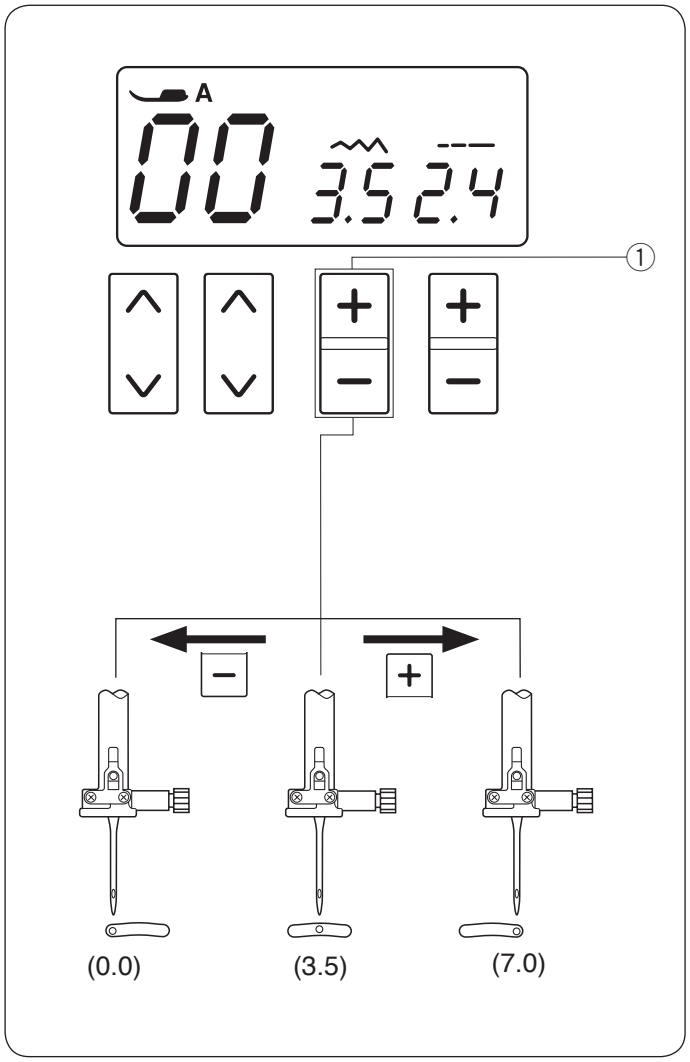

Altering the Needle Drop Position

The needle drop position can be altered for straight stitch patterns 00 to 04, 55 and 56.

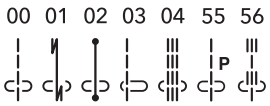

Press the “–” sign on the stitch width adjusting key to move the needle to the left.

Press the “+” sign on the stitch width adjusting key to move the needle to the right.

① Stitch width adjusting key

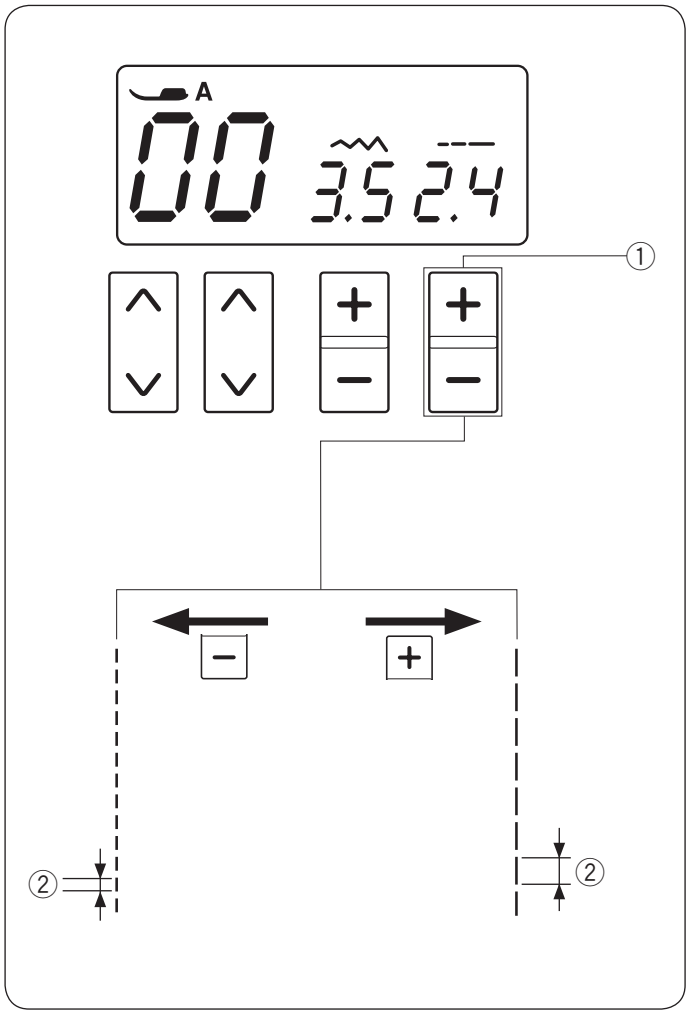

Altering the Stitch Length

The stitch length can be altered.

Press the “+” sign on the stitch length adjusting key to increase the stitch length.

Press the “–” sign on the stitch length adjusting key to decrease the stitch length.

① Stitch length adjusting key
② Stitch length

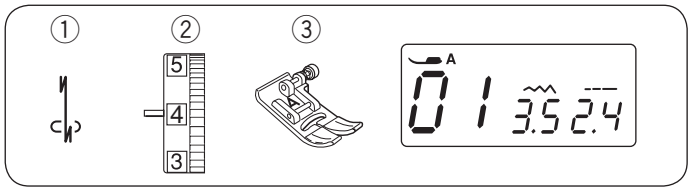

Lock-a-matic Stitch

① Stitch pattern: 01
② Thread tension dial: 2 to 6
③ Presser foot: Zigzag foot A

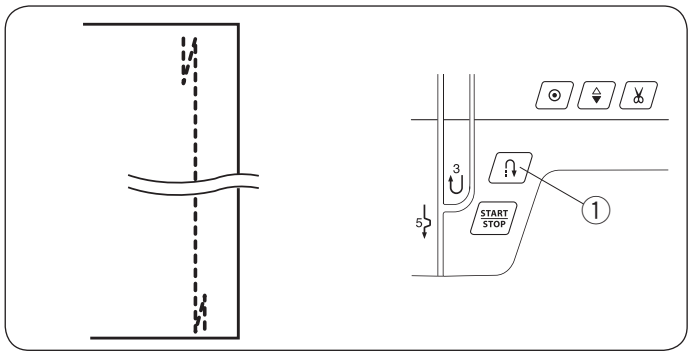

Use this stitch to secure the beginning and the end of a seam with backstitching.

When you reach the end of the seam, press the reverse button once. The machine will sew four reverse stitches, four forward stitches, and then stop sewing automatically.

① Reverse button

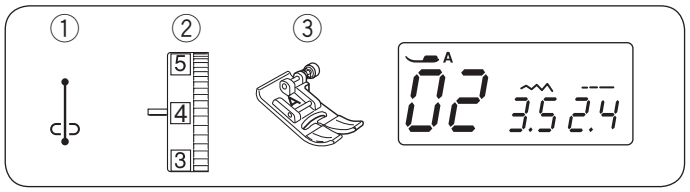

Locking Stitch

① Stitch pattern: 02
② Thread tension dial: 2 to 6
③ Presser foot: Zigzag foot A

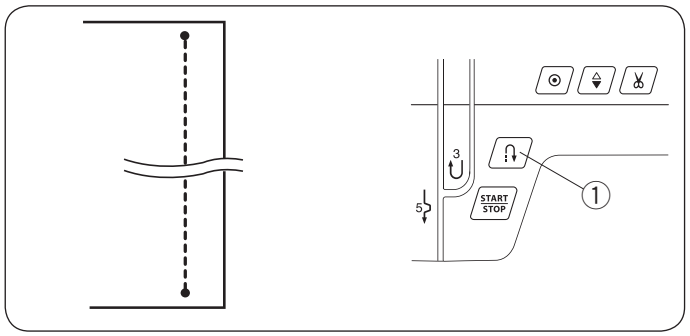

This unique stitch is used where an invisible locking stitch is needed.

Lower the needle close to the front edge of the fabric. The machine will sew several locking stitches in place and continue sewing forward.
When you press the reverse button at the end of the seam, the machine will sew several locking stitches in place, then stop sewing automatically.

① Reverse button

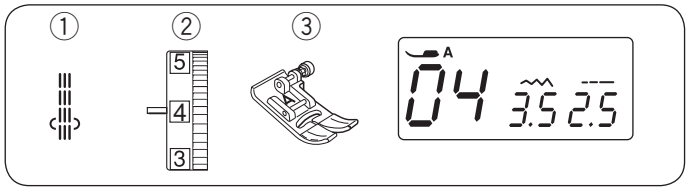

Triple Stretch Stitch

① Stitch pattern: 04
② Thread tension dial: 2 to 6
③ Presser foot: Zigzag foot A

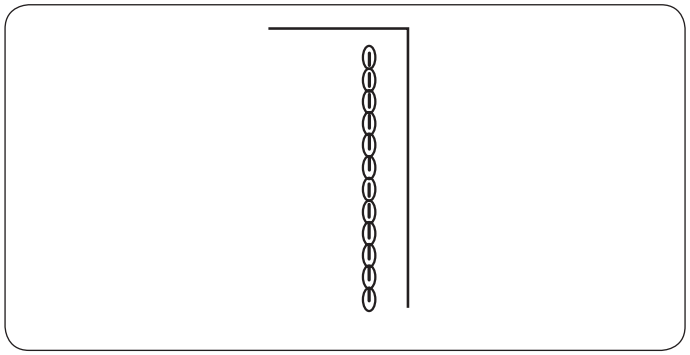

This strong, durable stitch is recommended when both elasticity and strength are necessary in order to insure comfort and durability. Use it to reinforce areas such as crotch and armhole seams. Also use for extra reinforcement when constructing items such as backpacks.

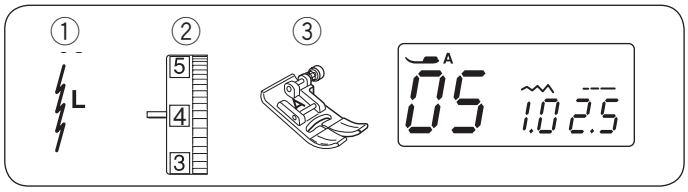

Stretch Stitch

① Stitch pattern: 05
② Thread tension dial: 3 to 6
③ Presser foot: Zigzag foot A

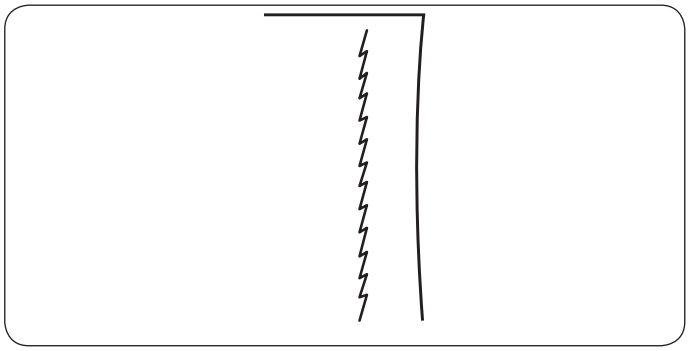

This stitch is a narrow stretch stitch designed to eliminate puckering on knit fabrics and bias seams, while permitting the seam to be pressed completely open flat.

Use this stitch for seaming fine fabrics.

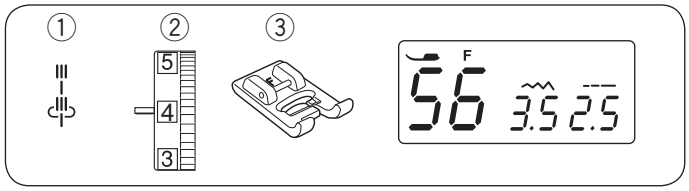

Sculpture Stitches

① Stitch pattern: 56
② Thread tension dial: 3 to 6
③ Presser foot: Satin stitch foot F

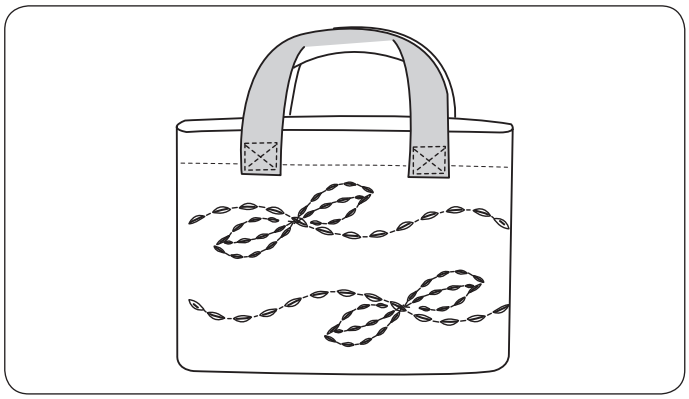

You can achieve a lovely hand-worked look when topstitching suits, blazers, jumpers, and denim outfits with these stitches.

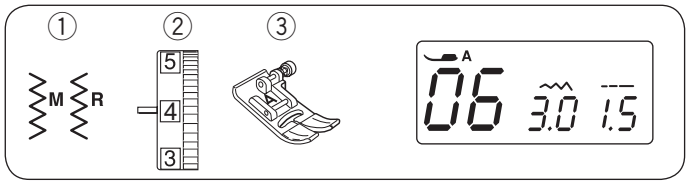

Zigzag Stitch

① Stitch pattern: 06 or 07
② Thread tension dial: 3 to 7
③ Presser foot: Zigzag foot A

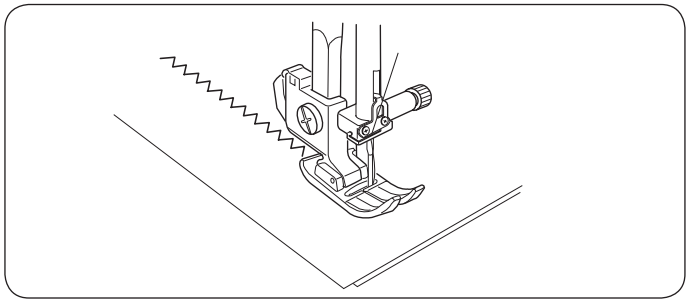

The zigzag stitch is one of the most useful and versatile stitches.
It is used for overcasting, mending, appliqué, and also used as a decorative stitch.

NOTE:
Use interfacing when sewing on stretch fabrics such as knit, jersey or tricot.

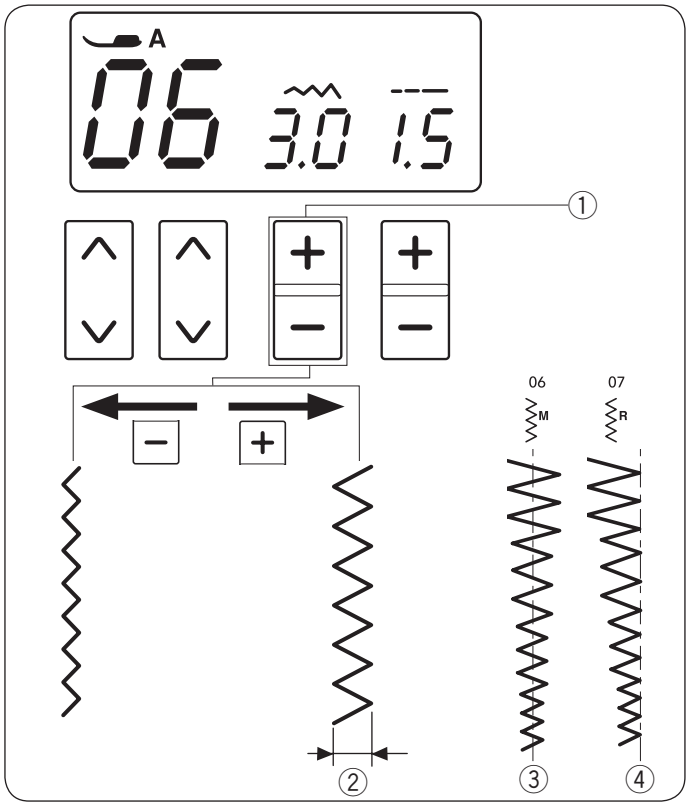

Altering the stitch width

Press the "+" sign on the stitch width adjusting key to increase the stitch width.

Press the "–" sign on the stitch width adjusting key to decrease the stitch width.

① Stitch width adjusting key
② Stitch width

The stitch width of pattern 06 can be changed without changing its center needle position (M) ③.

③ Center needle position

The stitch width of pattern 07 can be changed without changing its right needle position (R) ④.

④ Right needle position

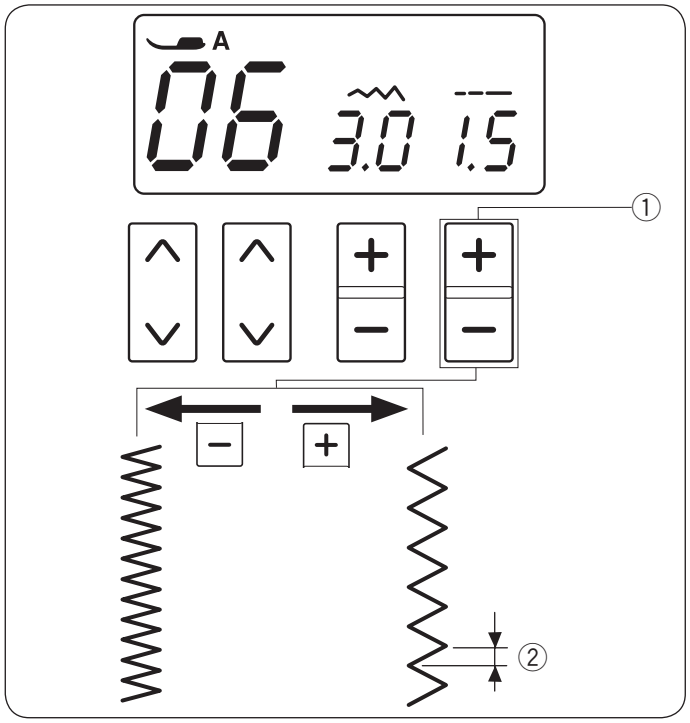

Altering the stitch length

Press the "+" sign on the stitch length adjusting key to increase the stitch length.

Press the "–" sign on the stitch length adjusting key to decrease the stitch length.

① Stitch length adjusting key
② Stitch length

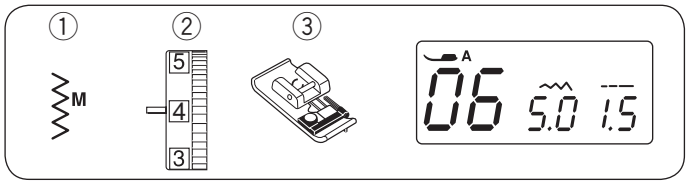

Overcasting with Zigzag Stitch

① Stitch pattern: 06
② Thread tension dial: 3 to 7
③ Presser foot: Overedge foot C

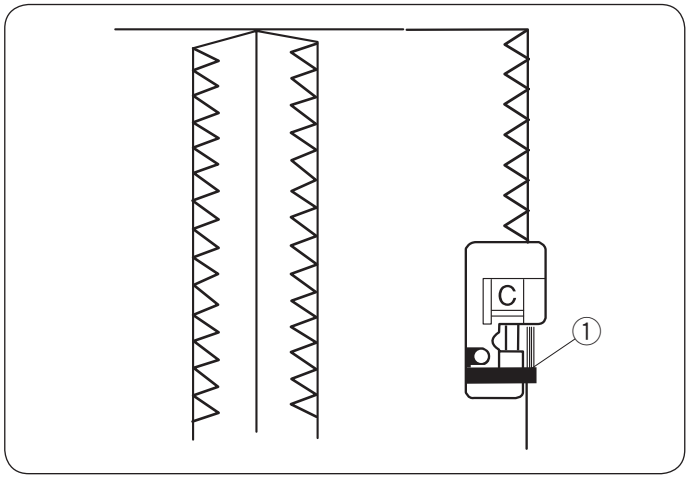

Place the fabric edge next to the guide on the foot and sew while guiding the fabric along the guide.

① Guide

⚠ CAUTION:
When using an overedge foot, make sure to set the stitch width at 4.5 or wider, otherwise the needle may hit the wires on the foot.

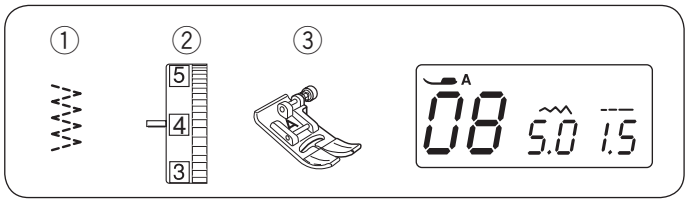

Multiple Zigzag Stitch

① Stitch pattern: 08
② Thread tension dial: 3 to 7
③ Presser foot: Zigzag foot A

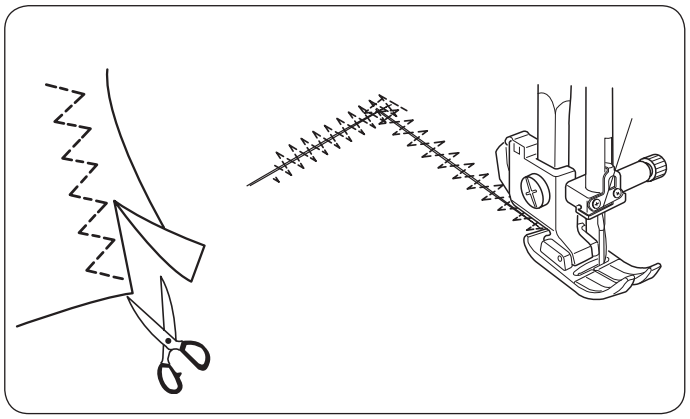

This stitch is used to finish a raw edge of synthetics and other stretch fabrics that tend to pucker.

Sew along the fabric edge leaving an adequate seam allowance.

After sewing, trim off the seam allowance closer to the stitches.

This stitch is also excellent for darning and mending tears.

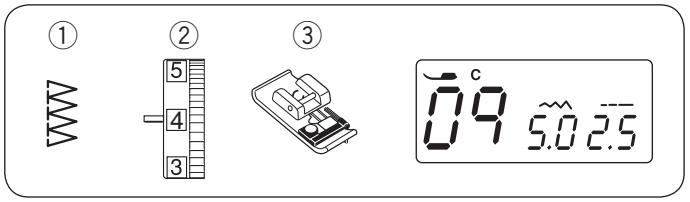

Overedge Stitch

① Stitch pattern: 09
② Thread tension dial: 3 to 7
③ Presser foot: Overedge foot C

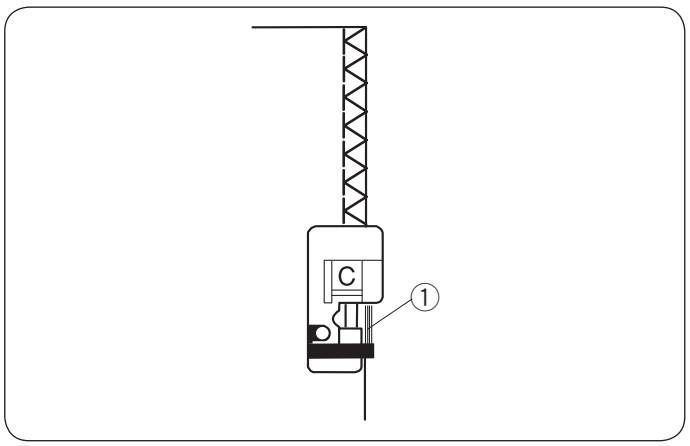

This stitch is used to seam and overcast fabric edges at one time.

Use this stitch when you do not need to open seams flat.

Sew while guiding the fabric edges along the guide on the foot.

① Guide

NOTE:
The stitch width cannot be adjusted to less than 4.5 to prevent the needle from hitting the wires on the foot.

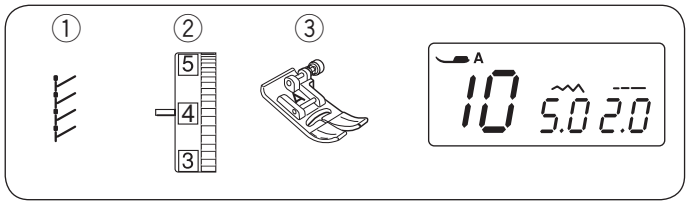

Knit Stitch

① Stitch pattern: 10
② Thread tension dial: 3 to 6
③ Presser foot: Zigzag foot A

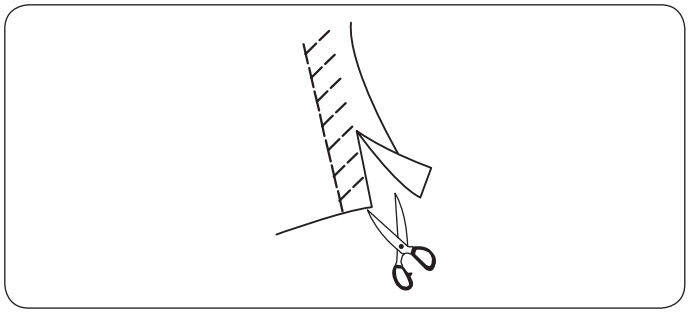

Place your fabric to allow a 5/8″ (1.5 cm) seam.

Trim excess close to the stitching. Be careful not to cut the stitches.

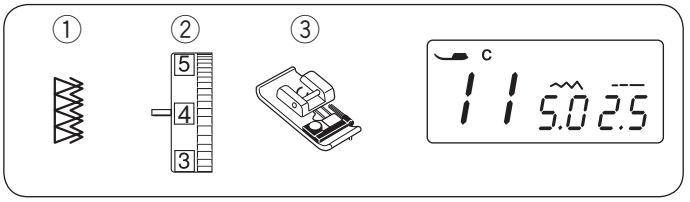

Double Overedge Stitch

① Stitch pattern: 11
② Thread tension dial: 3 to 7
③ Presser foot: Overedge foot C

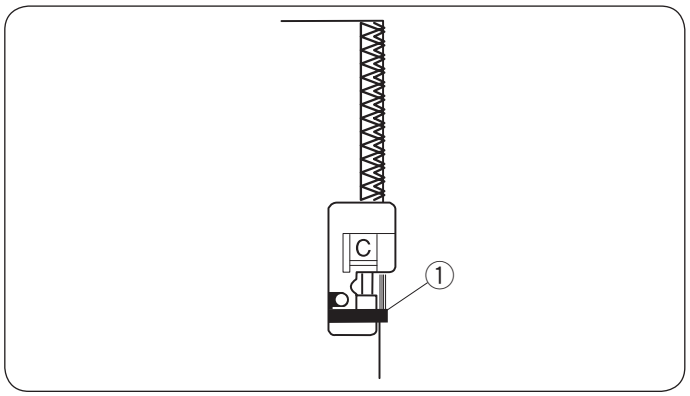

This stitch is excellent for sewing fabrics that tend to fray extensively such as linens and gabardines.

Two rows of zigzag stitches are simultaneously sewn over the edge to insure that your seams will not ravel.

Sew while guiding the fabric edges along the guide on the foot.

① Guide

NOTE:
The stitch width cannot be adjusted to less than 4.5 to prevent the needle from hitting the wires on the foot.

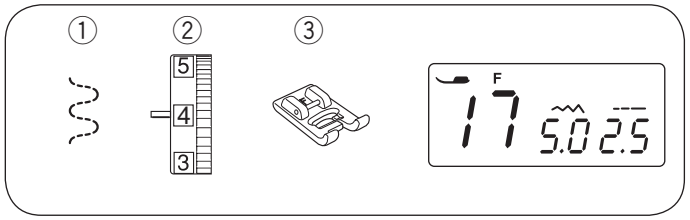

Attaching Elastic

① Stitch pattern: 17
② Thread tension dial: 1 to 4
③ Presser foot: Satin stitch foot F

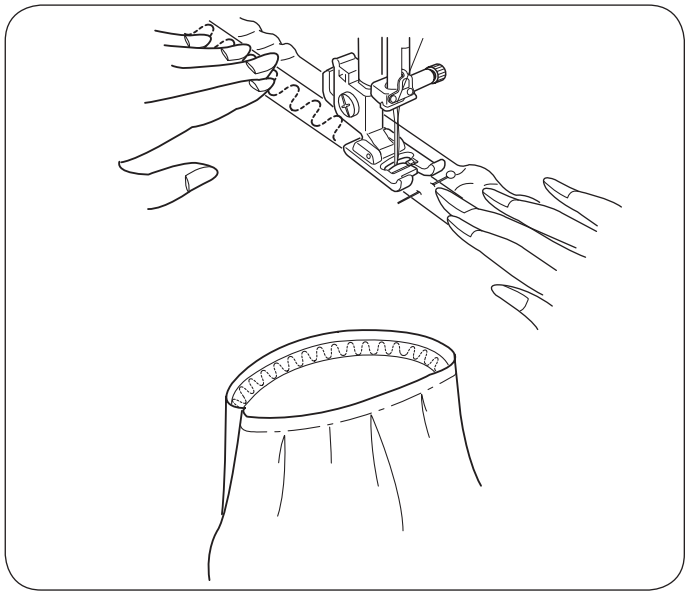

Mark the elastic into quarters. Match those to the center front, center back and side seams, and pin the elastic to the fabric.

Place the elastic under the foot and stitch into place while stretch the elastic evenly.

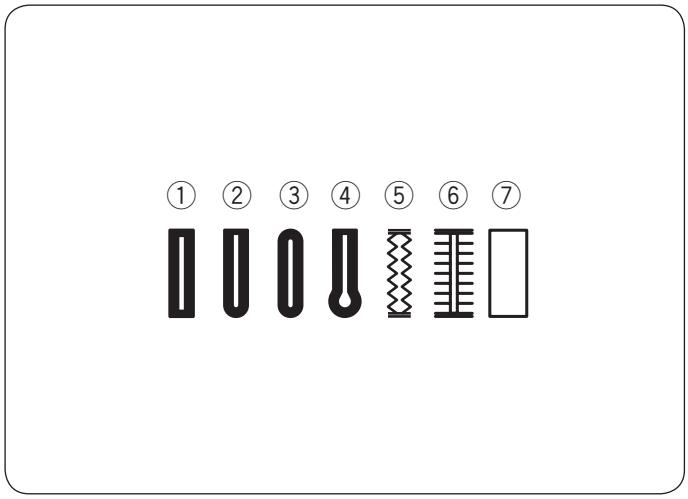

Buttonholes

The following 7 types of buttonholes are available.

① **Square buttonhole**
This buttonhole is widely used on medium to heavy fabrics.

② **Round-end buttonhole**
This buttonhole is used on fine to medium weight fabrics, especially for blouses and children's clothes.

③ **Fine fabric buttonhole**
This buttonhole is rounded at both ends and is used on fine, delicate fabrics such as fine silk.

④ **Keyhole buttonhole**
The keyhole buttonhole is widely used on medium to heavy fabrics. It is also suitable for larger and thicker buttons.

⑤ **Stretch buttonhole**
This buttonhole is suitable for stretch fabrics. It can also be used as a decorative buttonhole.

⑥ **Antique buttonhole**
Resembles a "Hand Worked" buttonhole ideal on fine fabrics featured in Heirloom sewing or for couture fashions.

⑦ **Welted buttonhole (Bound buttonhole)**
This is a template pattern for the hand-sewn welted buttonhole.

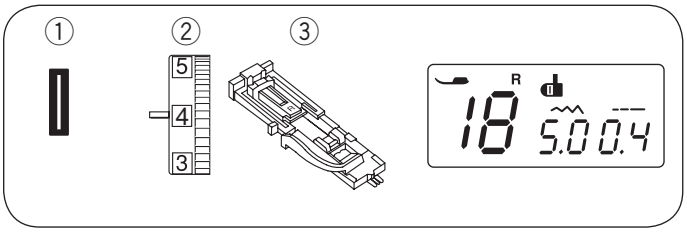

Square Buttonhole

① Stitch pattern: 18
② Thread tension dial: 1 to 4
③ Presser foot: Automatic buttonhole foot R

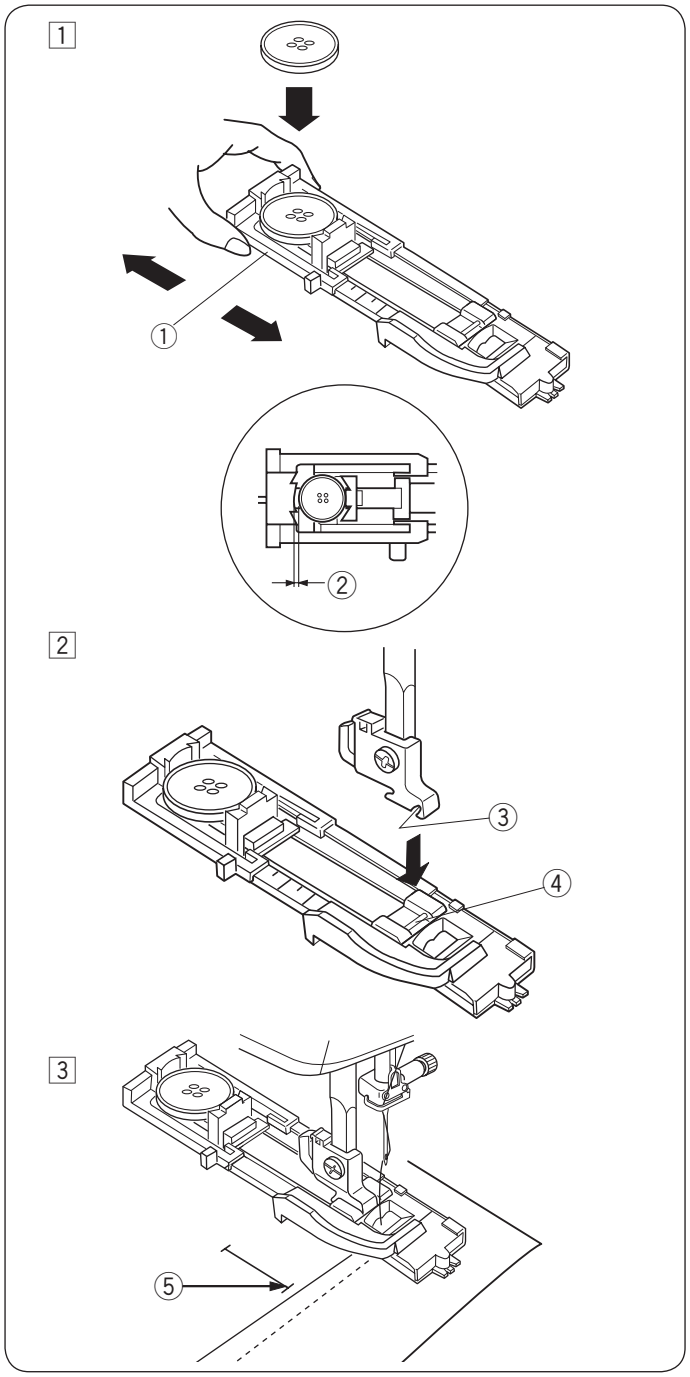

The size of a buttonhole is automatically set by placing a button in the rear of automatic buttonhole foot R.

The button holder of the foot takes a button size of 1 cm (3/8″) to 2.5 cm (1″) in diameter.

When selecting the buttonholes, the LCD display advise you to lower the buttonhole lever.

NOTE:
It is sometimes necessary to change buttonhole size to match certain heavy or specific fabrics and threads. Make a test buttonhole on an extra piece of the fabric to check your settings.
The preset width of the buttonhole is suited for ordinary buttons.
Apply an interfacing to stretch or fine fabrics.

Sewing

1 Pull the button holder to the back, and place the button in it. Push it together tightly on the button.
① Button holder

NOTE:
If the button is extremely thick, make a test buttonhole on an extra piece of the fabric.
If it is difficult to fit the button through the test buttonhole, you can lengthen the buttonhole by pulling the button holder back a little. The length of the buttonhole will be increased.
② Extra gap

2 Press the needle up/down button to raise the needle.
Attach the automatic buttonhole foot R snapping the pin into the groove of the foot holder.
You may lift the presser foot lifter to the extra lifted position when placing the automatic buttonhole foot under the foot holder.
Raise the presser foot.
③ Groove
④ Pin

3 Draw the needle thread to the left through the hole of foot. Mark the buttonhole position on the fabric and place it under the buttonhole foot. Lower the needle at the starting point by turning the handwheel.
⑤ Starting point

4

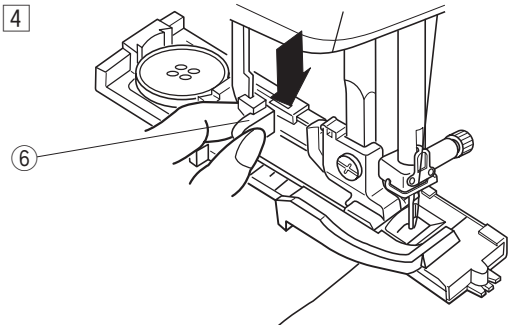

4 Lower the presser foot and pull the buttonhole lever down as far as it will go.
⑥ Buttonhole lever

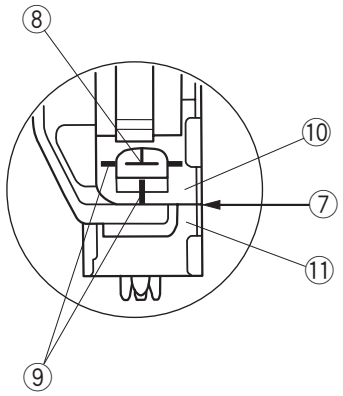

NOTE:
The reference lines on the buttonhole foot can be used as a positioning guide.
Make sure there is no gap between the slider and stopper, otherwise the buttonhole will be out of position or there will be a sewing gap.
⑦ No gap
⑧ Starting point
⑨ Reference lines
⑩ Slider
⑪ Stopper
⑫ Sewing gap

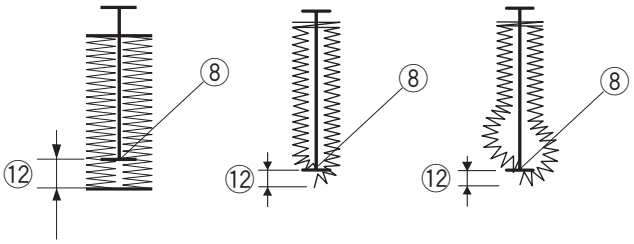

5

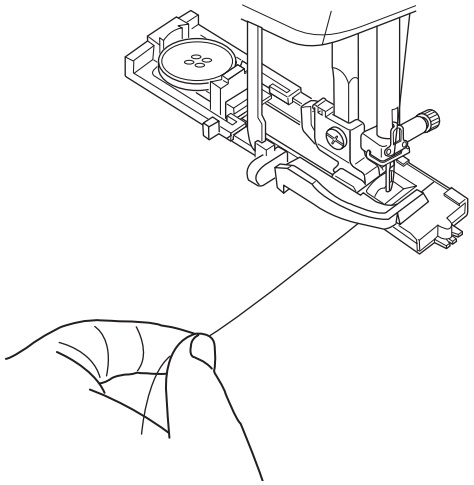

5 Start sewing while pulling the needle thread lightly to the left. After sewing a few stitches, free the thread and continue sewing.

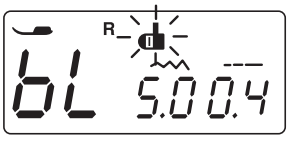

NOTE:
If you start sewing without pulling down the buttonhole lever, the LCD display will show a warning and the machine will stop after a few stitches. Pull the buttonhole lever down and start sewing.

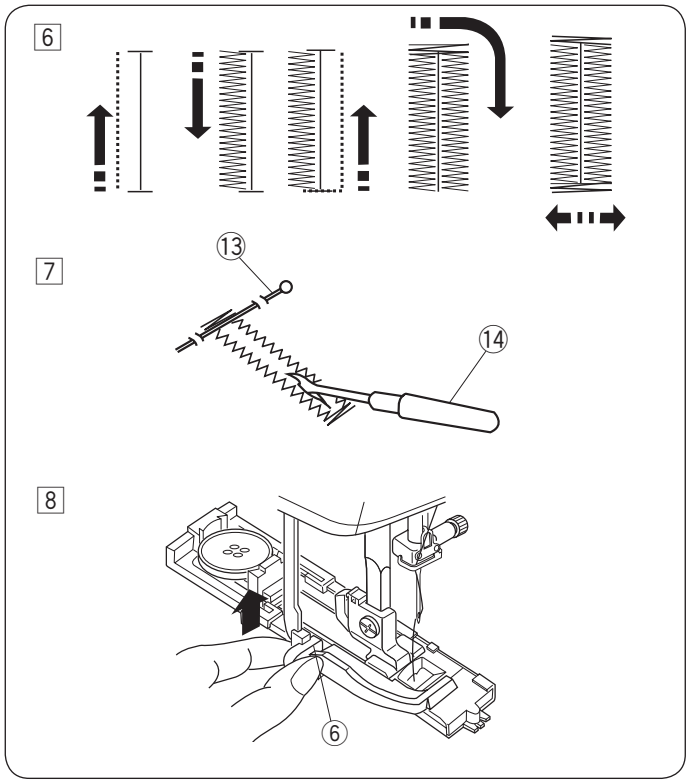

6 The buttonhole is sewn in the sequence as shown.
When the buttonhole is finished, the machine will stop automatically with the needle in the up position.

7 Remove the fabric and place a pin just below the bartack to prevent accidentally cutting the stitches.
Cut the opening with the seam ripper.
⑬ Pin
⑭ Seam ripper

8 When buttonhole sewing is finished, push the buttonhole lever upward as far as it will go.
⑥ Buttonhole lever

Double layer buttonhole

To make a sturdy buttonhole, sew another layer of buttonhole stitches over the previous stitches.

After the buttonhole is finished, do not raise the foot or buttonhole lever, simply start the machine again.

NOTE:
If the fabric is not feeding smoothly when sewing a double layer buttonhole, increase the buttonhole density.

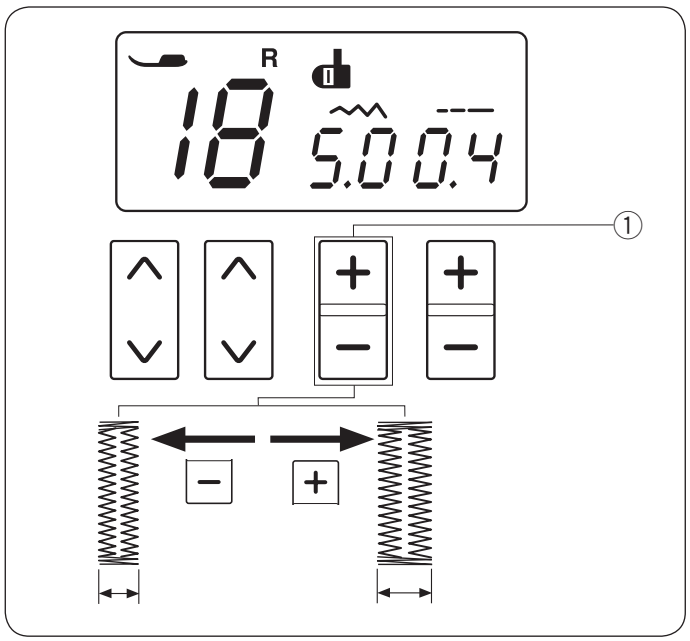

Altering the buttonhole width

Press the "+" sign on the stitch width adjusting key to increase the buttonhole width.

Press the "–" sign on the stitch width adjusting key to decrease the buttonhole width.

① Stitch width adjusting key

NOTE:
The buttonhole width can be adjusted from 2.5 to 7.0.

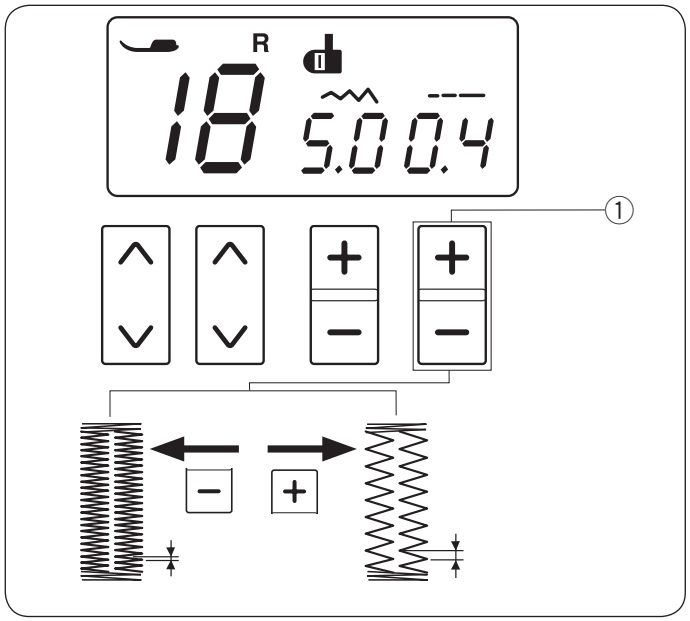

Altering the buttonhole density

Press the "+" sign on the stitch length adjusting key to decrease the buttonhole density.

Press the "–" sign on the stitch length adjusting key to increase the buttonhole density.

① Stitch length adjusting key

NOTE:
The buttonhole density can be adjusted from 0.2 to 0.8.

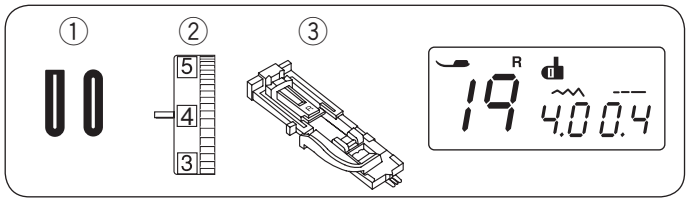

Round-end and Fine Fabric Buttonhole

① Stitch pattern: 19 and 20
② Thread tension dial: 1 to 4
③ Presser foot: Automatic buttonhole foot R

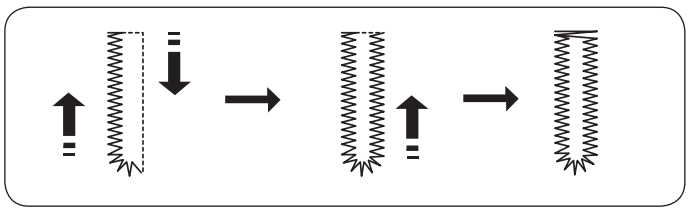

Sewing procedure is the same as square buttonhole.

The buttonhole width can be varied from 2.5 to 5.5.

The stitch density can be varied from 0.2 to 0.8.

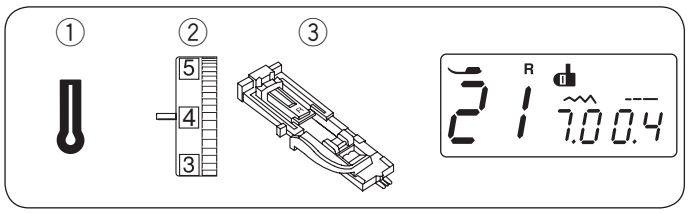

Keyhole Buttonholes

① Stitch pattern: 21
② Thread tension dial: 1 to 4
③ Presser foot: Automatic buttonhole foot R

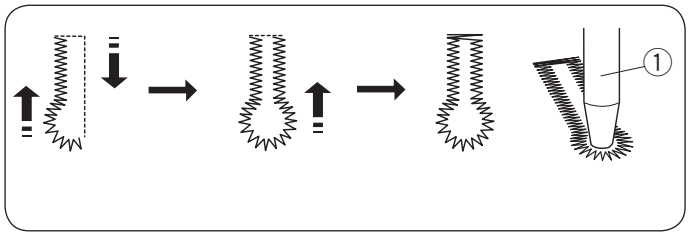

Sewing procedure is the same as square buttonhole.

The buttonhole width can be varied from 5.5 to 7.0.
The stitch density can be varied from 0.3 to 0.8.

Use the seam ripper and an eyelet punch to open the buttonhole.

① Eyelet punch (not provided with the machine)

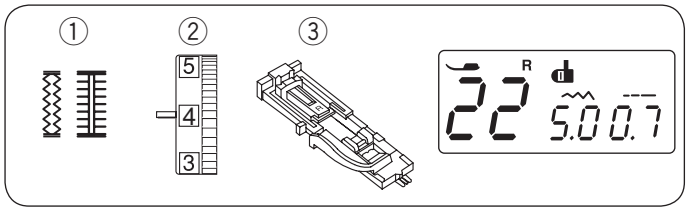

Stretch Buttonhole and Antique Buttonhole

① Stitch pattern: 22, 23
② Thread tension dial: 1 to 4
③ Presser foot: Automatic buttonhole foot R

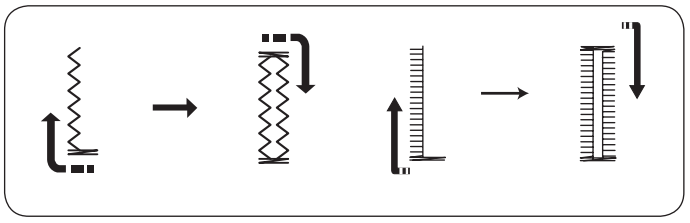

The machine will sew the front bartack and left row first.

The machine will sew the back bartack and right row, then it stops automatically.

The stitch width can be varied from 2.5 to 7.0.

The stitch density can be varied from 0.5 to 1.0 (Stretch buttonhole), 0.5 to 2.5 (Antique buttonhole).

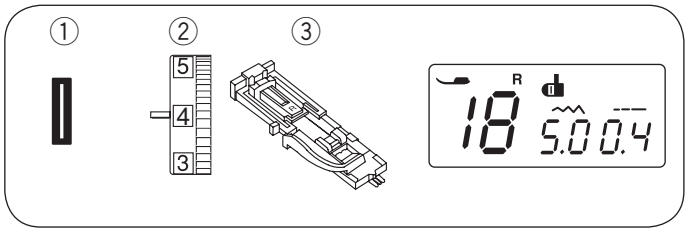

Corded Buttonhole

① Stitch pattern: 18
② Thread tension dial: 1 to 4
③ Presser foot: Automatic buttonhole foot R

1

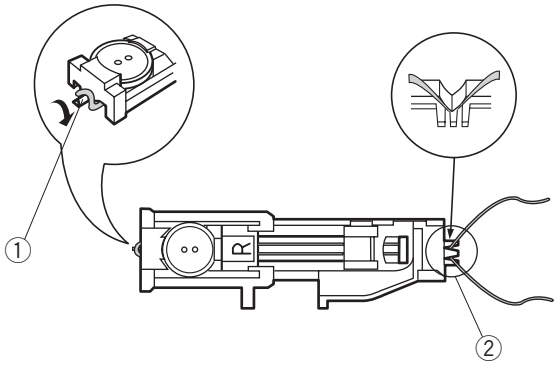

1 Use the same procedure as the square buttonhole sewing. Set the stitch width to match the thickness of the cord used.

With the buttonhole foot raised, hook the filler cord on the spur at the back of the buttonhole foot. Bring the ends toward you under the buttonhole foot, clearing the front end.

Hook the filler cord into the forks on the front of the buttonhole foot to hold them tight.

Lower the needle into the garment where the buttonhole will start, and lower the foot.

① Spur
② Forks

2

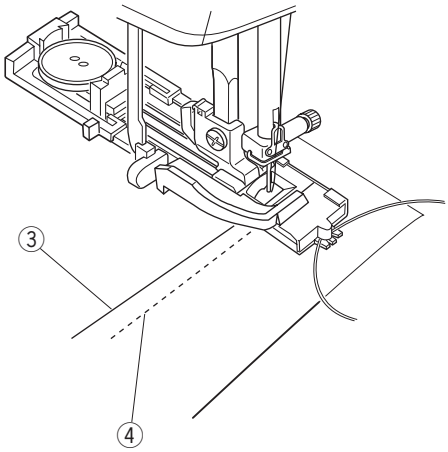

2 Start the machine and sew the buttonhole.

Each side of the buttonhole and the bartacks will be sewn over the cord.

Remove the fabric from the machine, and cut the sewing threads only.

③ Needle thread
④ Bobbin thread

3

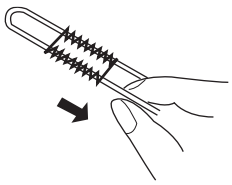

3 Pull the loose ends of the filler cord to tighten it. Thread the each end of the cord through a hand-sewing needle. Then draw the both ends to the wrong side of the fabric and knot.

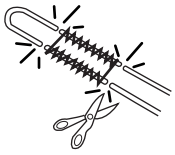

NOTE:
Cut the filler cord at both ends, if the filler cord is stitched on the fabric and cannot be pulled.

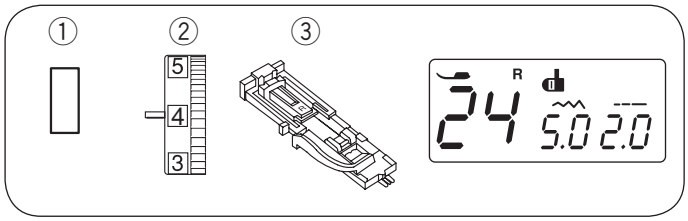

Welted Buttonhole

① Stitch pattern: 24
② Thread tension dial: 1 to 4
③ Presser foot: Automatic buttonhole foot R

A welted buttonhole is made by stitching a strip or patch of fabric to the buttonhole.

Welted buttonholes are particularly suitable for tailored garments, but are not recommended for sheer or delicate fabrics where the patch might show through or add bulk.

1

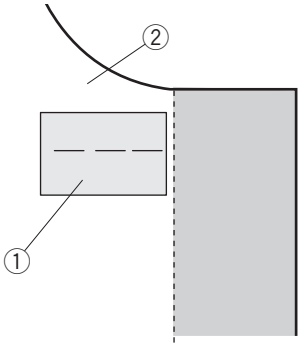

1 Baste a patch to the garment fabric with the right sides together.
① Wrong side of patch
② Right side of garment fabric

2

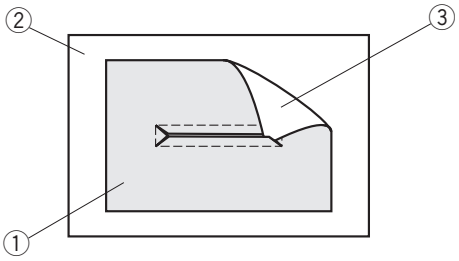

2 Select pattern 24.
Sew the welted buttonhole on both fabrics together.
Cut the buttonhole opening as illustrated then pull the patch out through the slit to the other side.
① Wrong side of patch
② Right side of garment fabric
③ Right side of patch

3

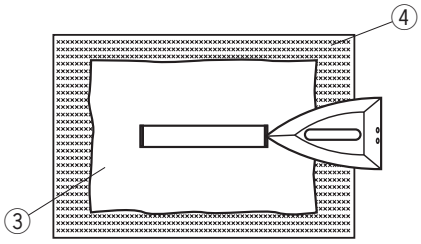

3 Pull out the patch until the right side of the patch is showing. Use an iron to press both corner ends until they are squared off.
③ Right side of patch
④ Wrong side of garment fabric

4

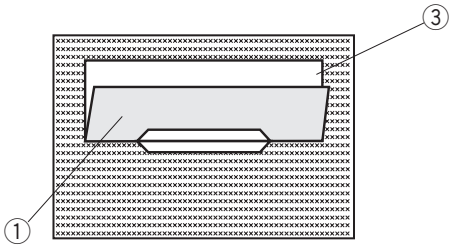

4 Fold back each side of the patch to form buttonhole lips.
① Wrong side of patch
③ Right side of patch

5

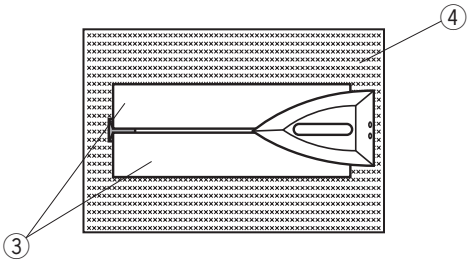

5 Press both folds with an iron.
③ Right side of patch
④ Wrong side of garment fabric

6

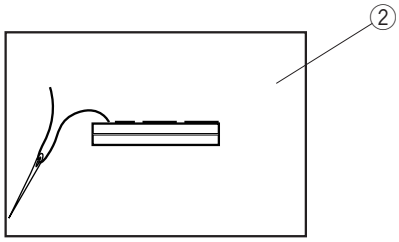

6 Baste both edges of the seam with a needle and thread by hand.
② Right side of garment fabric

7

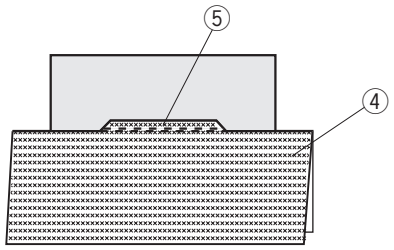

7 Fold over the length of the garment fabric, sew back and forth beside the original seam to secure flaps of the patch.
④ Wrong side of garment fabric
⑤ Sew back and forth

8

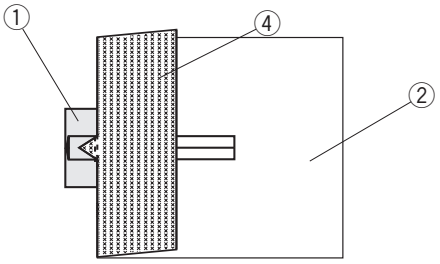

8 Fold over the end of fabric and sew back and forth three times over the triangular end.
① Wrong side of patch
② Right side of garment fabric
④ Wrong side of garment fabric

9

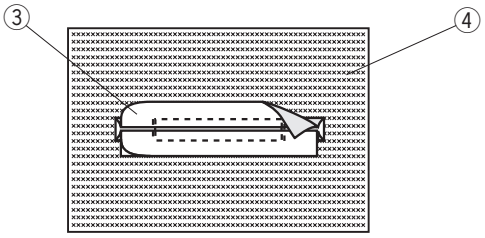

9 The patch should be cut 1 to 1.5 cm (7/16″ – 5/8″) away from the hole. The corners should be cut rounded off as shown.
③ Right side of patch
④ Wrong side of garment fabric

10

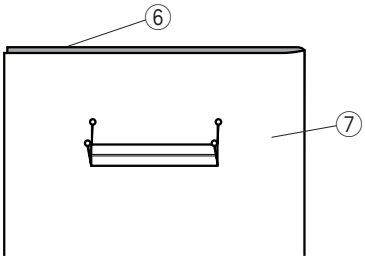

10 Place the facing on the wrong side of the garment fabric. Mark the 4 corners with pins as shown.
⑥ Facing
⑦ Garment fabric

11

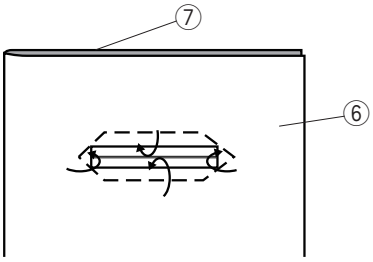

11 Turn all the layers over and cut the buttonhole opening on the facing in the same way as step 2.

Four marker pins show you the corner points on the facing. Fold back each flap between the facing and patch.
⑥ Facing
⑦ Garment fabric

12

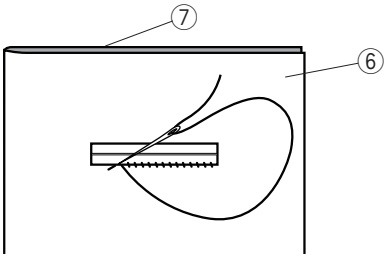

12 Stitch around the opening with a needle and thread as shown.
⑥ Facing
⑦ Garment fabric

13

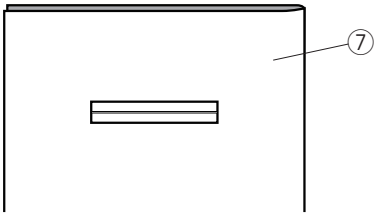

13 The welted buttonhole is complete.
⑦ Garment fabric

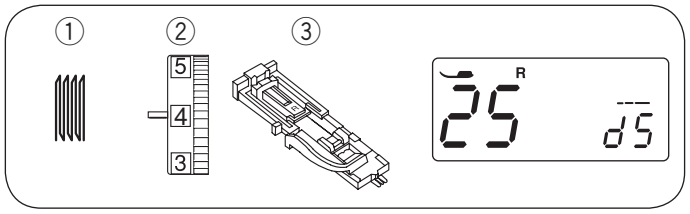

Darning Stitch

① Stitch pattern: 25
② Thread tension dial: 3 to 6
③ Presser foot: Automatic buttonhole foot R

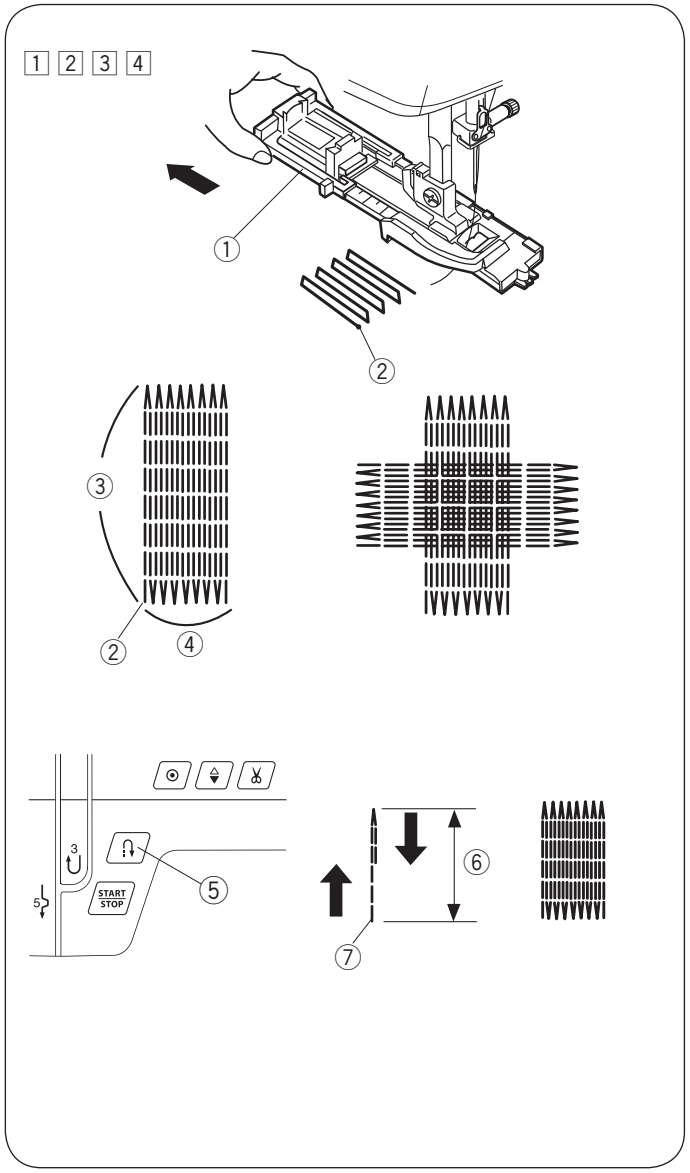

Starting to sew

1 Attach the automatic buttonhole foot R and pull the button holder ① all the way out.

Draw the needle thread to the left through the hole of foot.

① Button holder

2 Place the fabric under the foot, and lower the needle at the starting point ②. Then lower the foot.

② Starting point

3 Start the machine. The machine will sew locking stitch, 16 rows of darning, locking stitch again and stop automatically.

4 Turn the fabric and repeat sewing in different direction.

③ 3/4″ (2 cm)
④ 9/32″ (0.7 cm)

Sewing a shorter darning

To sew a darning shorter than 3/4″ (2 cm), first stop the machine after sewing the required length ⑥, then press the reverse button ⑤.
The required length ⑥ has been determined.
Start the machine again and continue sewing until the machine stops automatically.

⑤ Reverse button
⑥ Required length
⑦ Starting point

Sewing a same-sized darning

Simply start the machine to sew another darning at the same size.

NOTE:
To reset the size of the darning, select the other stitch pattern and reselect the darning stitch.

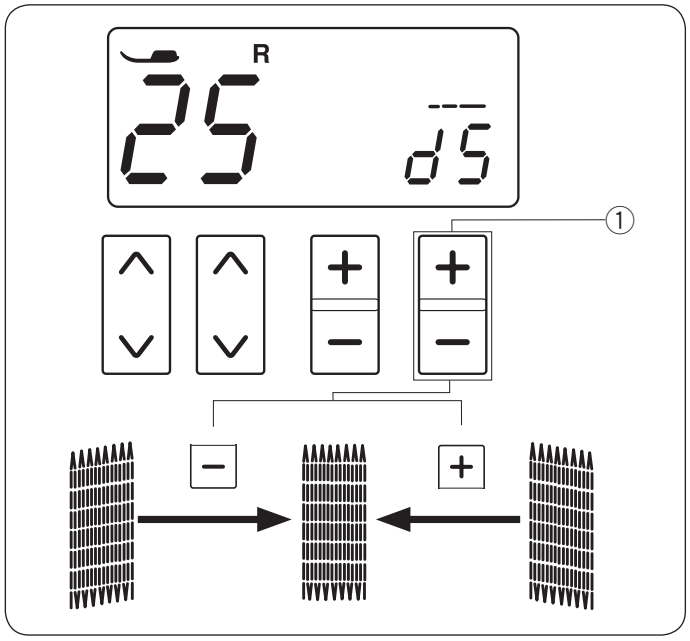

Adjusting the evenness of darning

Correct the evenness of the darning as follows:
“d5” is the default setting value.

When the right side of the darn is lower than the left side, press the “+” sign on the stitch length adjusting key ① to set the value to “d6” to “d9”, and make the darn even.

When the left side of the darn is lower than the right side, press the “–” sign on the stitch length adjusting key ① to set the value to “d1” to “d4”, and make the darn even.

① Stitch length adjusting key

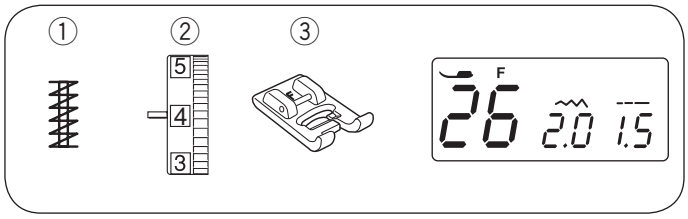

Tacking

① Stitch pattern: 26
② Thread tension dial: 3 to 6
③ Presser foot: Satin stitch foot F

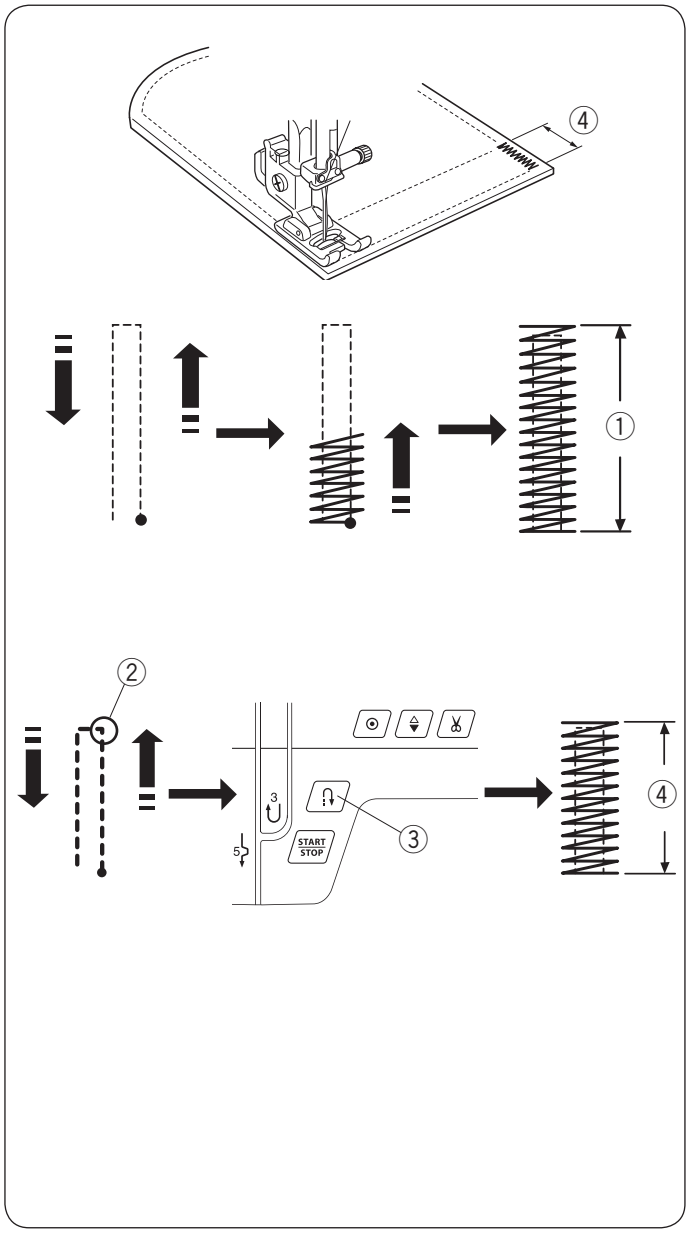

Tacking is used to reinforce pockets, crotches and belt carriers where extra strength is needed.

Start sewing

Start the machine and sew until the machine stops automatically. The machine will sew a tacking 1.5 cm (5/8″) long.

① 1.5 cm (5/8″)

Sewing a shorter tack

To sew a tack shorter than 1.5 cm (5/8″), first stop the machine after sewing the required length, then press the reverse button.

The tack length has been determined.

Start the machine again and continue sewing until the machine stops automatically.

② Required length
③ Reverse button
④ Tack length

Sewing a same-size tacking

Simply start the machine to sew another tack at the same size.

NOTE:
To reset the size of the tacking, select the other stitch pattern and reselect the tacking.

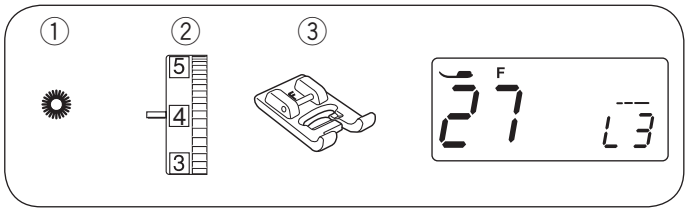

Eyelet

① Stitch pattern: 27
② Thread tension dial: 1 to 4
③ Presser foot: Satin stitch foot F

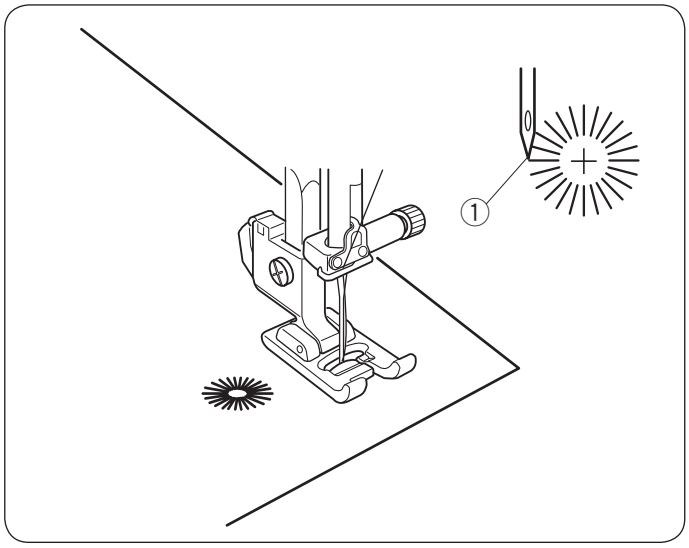

The eyelet is used for belt holes etc.

Starting to sew

Lower the needle at the starting point and lower the presser foot. Start the machine.
The machine will stop automatically when completed.

① Starting point

Open the eyelet with an awl, eyelet punch or pointed scissors (an awl, eyelet punch or pointed scissors are not provided with the machine).

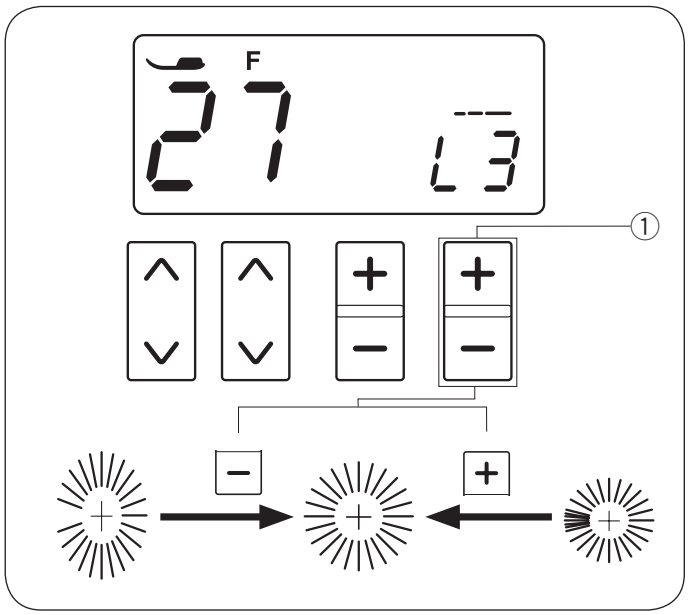

Adjusting the shape of an eyelet

Correct the shape of the eyelet as follows:
"L3" is the default setting value.

If the eyelet gap overlaps, press the "+" sign on the stitch length adjusting key to make the darn even.

If the eyelet gap opens, press the "–" sign on the stitch length adjusting key to make the darn even.

① Stitch length adjusting key

NOTE:
The shape can be adjusted within L1 to L5.

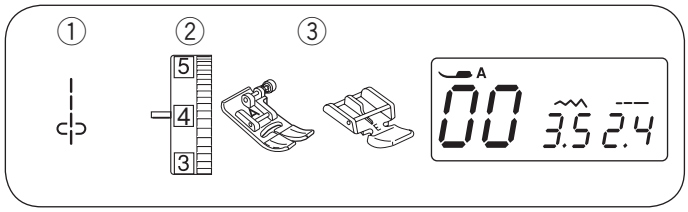

Zipper Sewing

① Stitch pattern: 00
② Thread tension dial: 1 to 4
③ Presser foot: Zigzag foot A
Zipper foot E

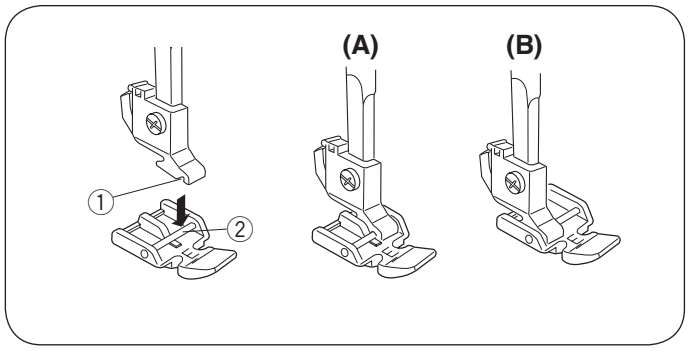

Attaching the zipper foot

Fit the pin on zipper foot E to the groove on the foot holder.

① Groove
② Pin

(A): To sew the left side of the zipper, attach the zipper foot with the pin on the right-hand side.

(B): To sew the right side of the zipper, attach the zipper foot with the pin on the left-hand side.

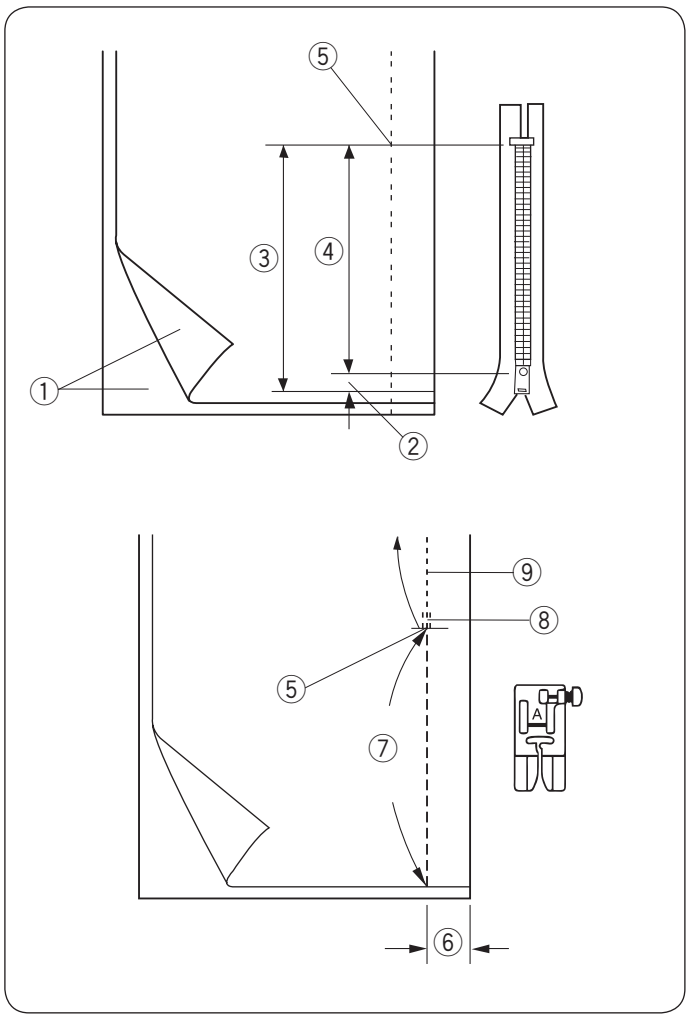

Fabric preparation

Add 1 cm (3/8″) to the zipper length. This is the overall opening size.

① Right side of the fabric
② 1 cm (3/8″)
③ Opening size
④ Zipper length
⑤ End of the zipper opening

Place the right sides of the fabric together.

Attach the zigzag foot and seam up to the end of the zipper opening, with a 2 cm (13/16″) seam allowance. Reverse the stitch to fasten the seam.

Manually increase the stitch length to 5.0 and baste the zipper opening with the thread tension loosened to 1-3.

⑤ End of the zipper opening
⑥ 2 cm (13/16″)
⑦ Basting
⑧ Reverse stitches
⑨ Seam stitches

1

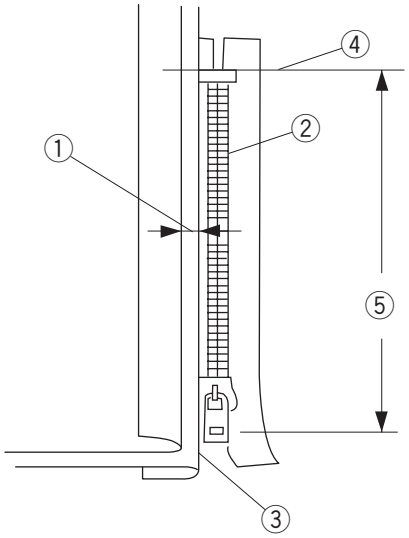

2

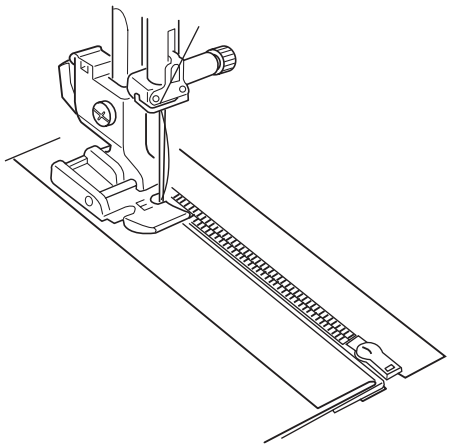

3

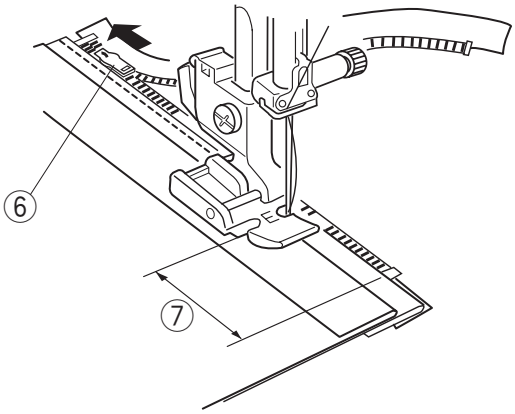

Start sewing

1 Fold back the left seam allowance. Turn the right seam allowance under to form a 0.2 to 0.3 cm (1/8″) margin. Place the zipper teeth next to the fold and pin in place. Set the stitch length and thread tension back to the original setting.

① 0.2 to 0.3 cm (1/8″) margin
② Zipper teeth
③ Fold
④ End of the zipper opening
⑤ Opening size

2 Attach the zipper foot E with the pin on the right hand side.

Lower the foot onto the topside at the end of the zipper opening so that the needle pierces the fabric next to the fold and the zipper tape.

⚠ CAUTION:
Be sure that the needle does not strike the presser foot or zipper teeth when the zipper foot is attached.

3 Sew through all layers next to the fold.

Stop the machine 5 cm (2″) before the foot reaches the slider on the zipper tape.

Lower the needle slightly into the fabric.

Raise the foot and open the zipper to clear the slider. Lower the foot and stitch the remainder of the seam.

⑥ Slider
⑦ 5 cm (2″)

4

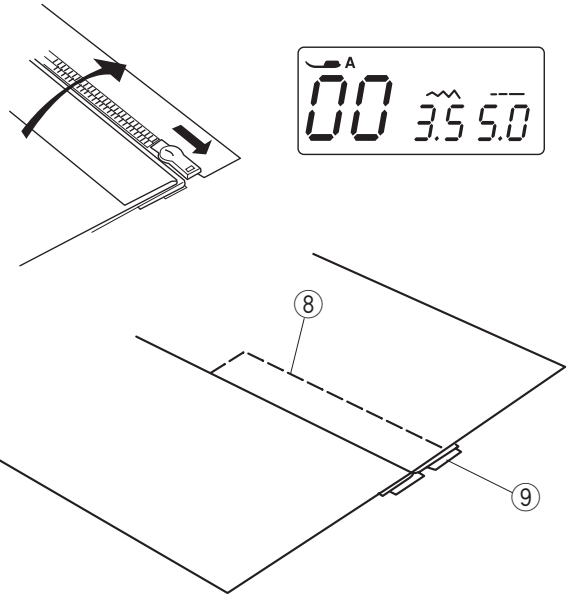

4 Close the zipper and spread the fabric open flat with the right side facing up.

Attach the Zigzag foot A.

Adjust the stitch length to 5.0, stitch width to 3.5 (default value) and the thread tension dial to 1.

Baste the opened fabric and zipper tape together.

⑧ Basting stitch
⑨ Zipper tape

5

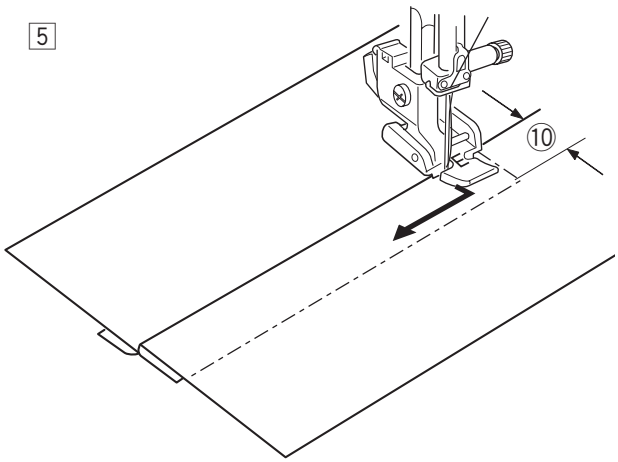

5 Attach the zipper foot E with the left pin.

Adjust the stitch length and the stitch width to default value, and thread tension dial to “4”.

Backstitch across the end of the opening 0.7-1 cm (3/8″) and turn the fabric 90 degrees.

⑩ 0.7-1 cm (3/8″)

⚠ CAUTION:
Be sure that the needle does not strike the presser foot or zipper teeth when the zipper foot is attached.

6

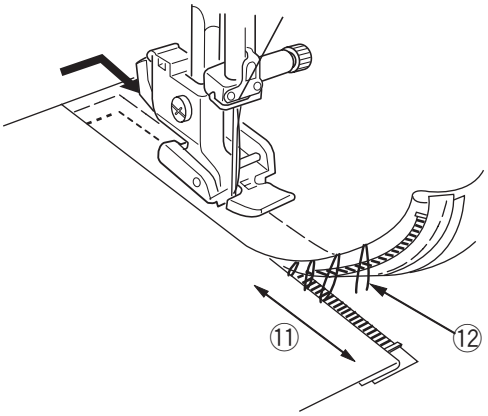

6 Stitch through the garment and zipper tape, guiding the zipper teeth along the side edge of the foot.

Stop the machine 5 cm (2″) before the foot reaches the slider on the zipper tape. Lower the needle into the fabric, and raise the foot. Remove the basting stitches.

⑪ 5 cm (2″)
⑫ Basting stitches

7

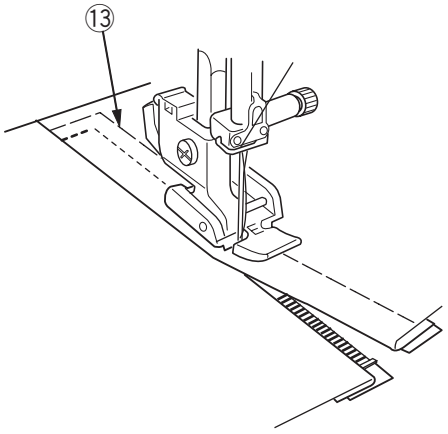

7 Open the zipper, then lower the foot and stitch the remainder of the seam.

After sewing is finished, remove the basting stitches on the upper fabric.

⑬ Basting stitches on upper fabric

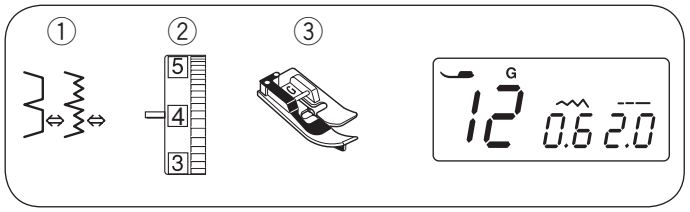

Blind Hemming

① Stitch pattern: 12 or 13
② Thread tension dial: 1 to 4 (for stitch pattern 12)
3 to 6 (for stitch pattern 13)
③ Presser foot: Blind hem foot G

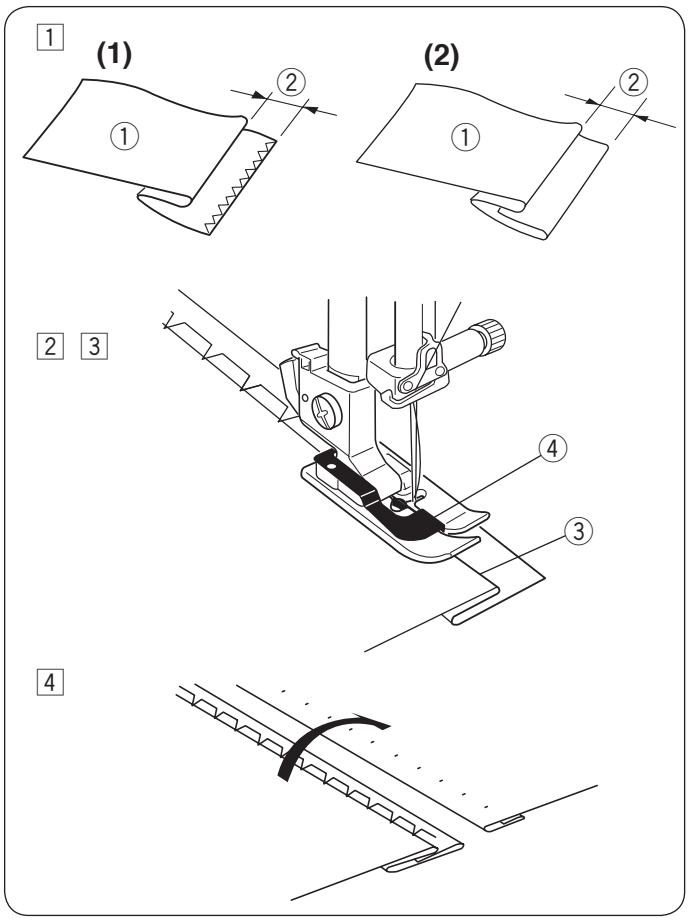

1 Fold a hem with the wrong side of the fabric up to form a 0.5 cm (1/4″) allowance.
① Wrong side of fabric
② 0.5 cm (1/4″)

(1) On heavyweight fabrics that tend to ravel, the raw edge should be overcast first.

(2) Fold the hem under the fabric for lightweight fabrics.

2 Place the fabric so that the fold is next to the guide on the foot.
Lower the presser foot.
Adjust the needle drop position if necessary.

3 Sew while guiding the folded edge.
③ Folded edge
④ Guide

4 Open the fabric after sewing is finished.

NOTE:
If the needle pierces too far left, the stitch will show through on the right side of the fabric.

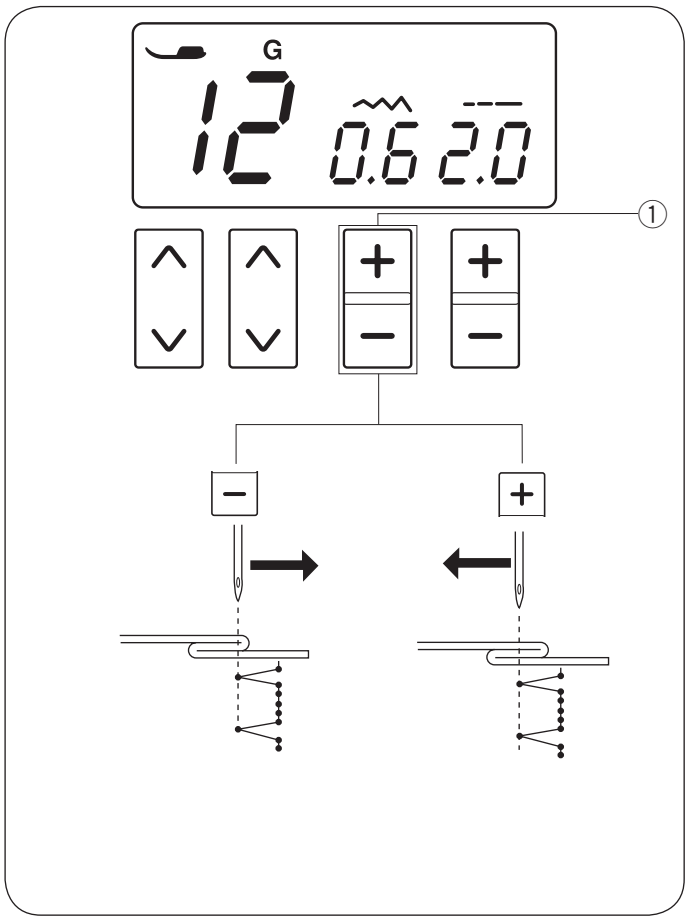

Adjusting the needle drop position

Adjust the needle drop position as follows:

Press the “–” sign on the stitch width adjusting key ① to move the needle to the right.

Press the “+” sign on the stitch width adjusting key ① to move the needle to the left.
① Stitch width adjusting key

The LCD display shows a distance from the center needle drop position in millimeters.

The needle drop position can be varied from 0.0 to 1.2.

NOTE:
The needle drop position can be moved, but the stitch width will remain the same.

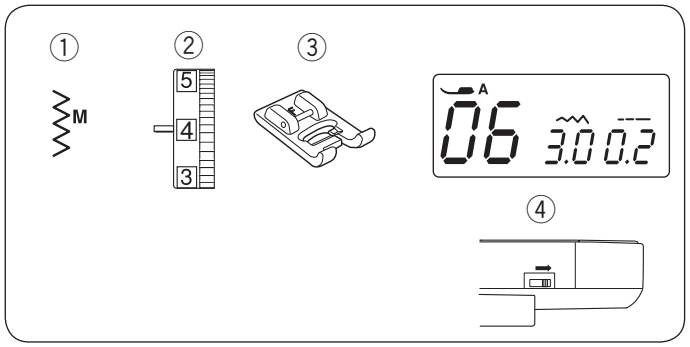

Button Sewing

① Stitch pattern: 06
② Thread tension dial: 3 to 7
③ Presser foot: Satin stitch foot F
④ Feed dog: Lowered

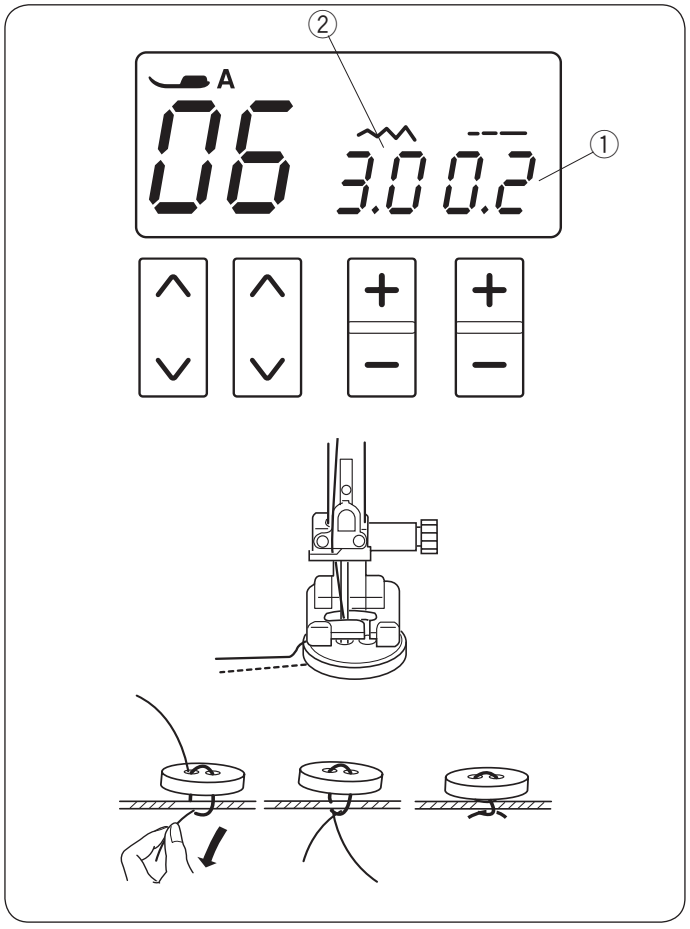

Lower the feed dog.

Set the speed control slider at a slower speed.

Set the stitch length at the minimum (0.2).
① Stitch length (0.2)

Match the holes of button to the horizontal slot of the presser foot and lower the foot to hold the button in place.

Adjust the stitch width so the needle will enter the left hole of the button.

Turn the handwheel so that the needle will enter the right hole of the button. Readjust the stitch width if necessary.
② Stitch width (adjust to span of holes)

Stitch several times.

After you finish sewing, cut the thread but leave 10 cm (4″) of threads at the end.

Pull the bobbin thread to draw the top thread to the reverse side of the fabric and knot the threads.

After the button sewing is completed, raise the feed dogs for normal sewing.

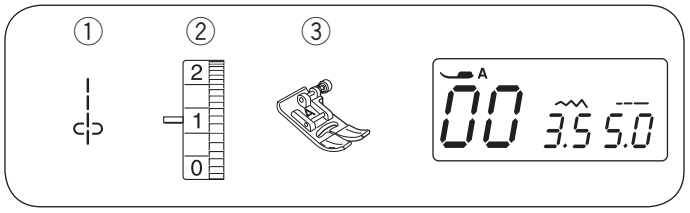

Gathering

① Stitch pattern: 00
② Thread tension dial: 1
③ Presser foot: Zigzag foot A

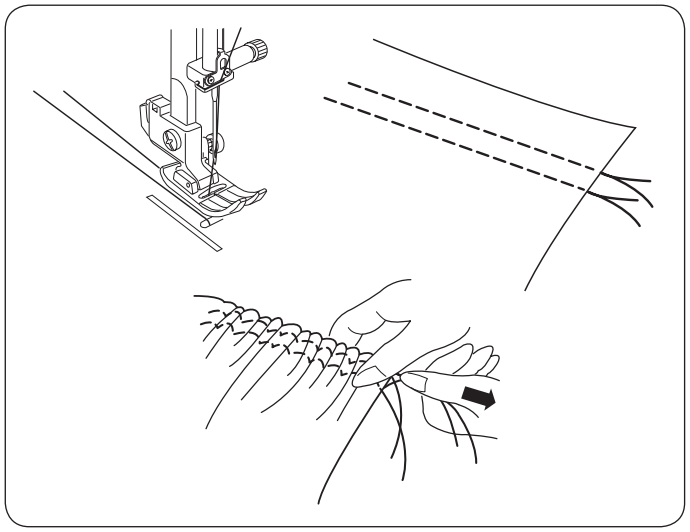

Loosen the thread tension to “1” and increase the stitch length to 5.0.

Sew two rows of straight stitches 0.6 cm (1/4″) apart. Knot the threads at the beginning.

Pull the bobbin threads at the end to gather the fabric.

Knot the threads at the end and distribute the gathers evenly.

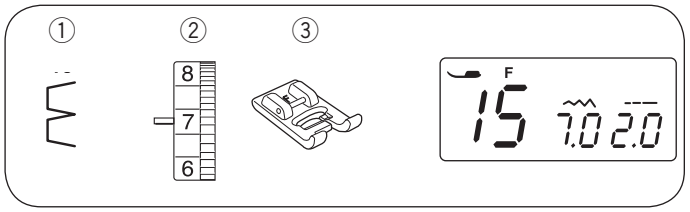

DECORATIVE STITCHING

Shelltuck

① Stitch pattern: 15
② Thread tension dial: 6 to 8
③ Presser foot: Satin stitch foot F

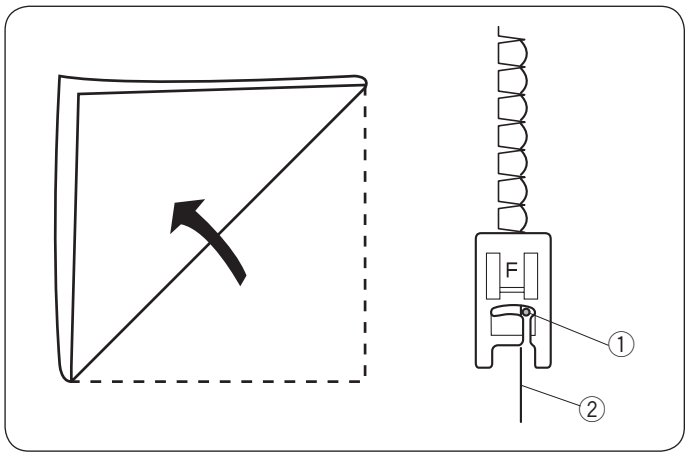

Use a lightweight fabric (tricot, for example).

Fold the fabric in bias as shown and stitch on the fold.

Allow the needle to barely clear the folded edge to create a shelled edge.

① Needle
② Fold

If you sew rows of shell tuck, space the rows at least 1.5 cm (5/8″) apart.

You can also sew shell tuck on knits or soft silky woven fabrics, in any direction.

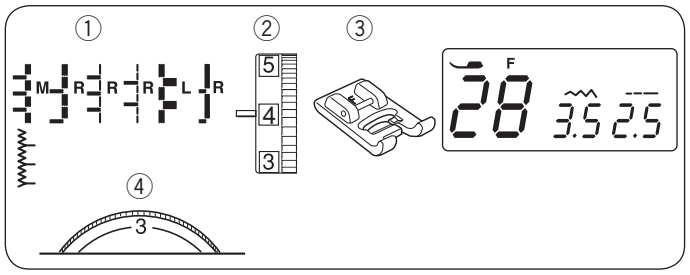

Applique

① Stitch pattern: 28
② Thread tension dial: 1 to 4
③ Presser foot: Satin stitch foot F
④ Presser foot pressure dial: 1 to 3

* The stitch patterns 29-34 can also be used.

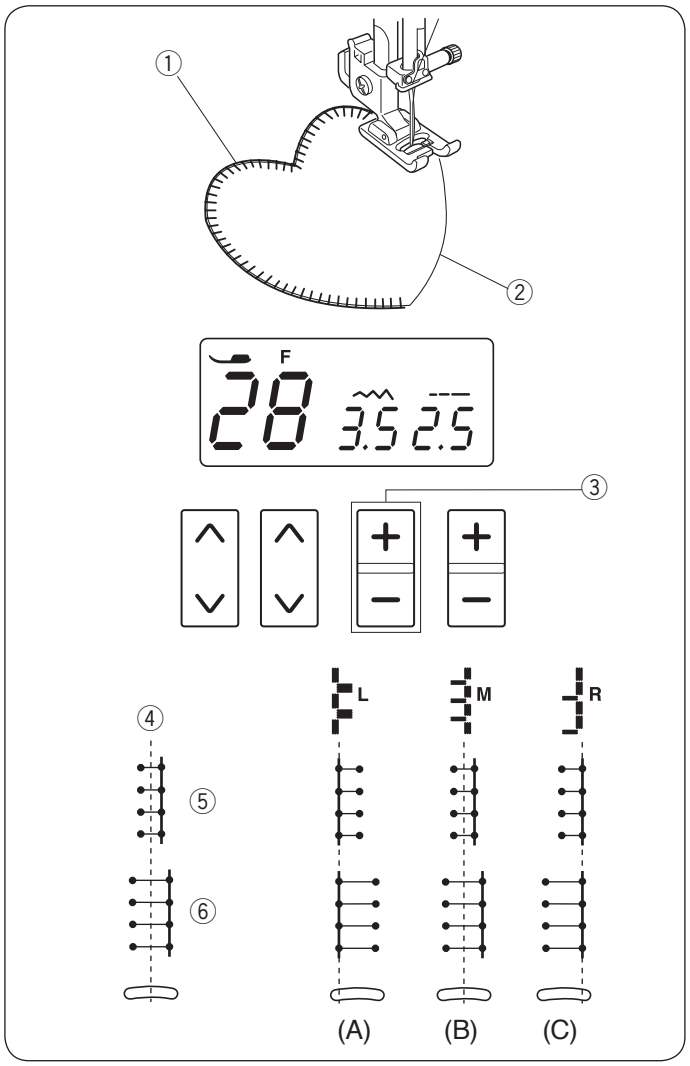

Place an applique on the fabric and baste or pin it in place.

Lower the needle at the outer edge of the applique.

Sew while guiding the fabric so the needle falls along the outer edge of the applique.

① Applique
② Outer edge

When turning a sharp corner, stop the machine with the needle at the outer edge of the applique.

Raise the foot and pivot the fabric around the needle to change the sewing direction.

• Adjusting the stitch width

Select pattern 28.

Press the “–” sign on the stitch width adjusting key ③ to decrease the stitch width ⑤.

Press the “+” sign on the stitch width adjusting key ③ to increase the stitch width ⑥.

③ Stitch width adjusting key

The stitch width will be varied based on the centered needle drop position ④.

(A) The stitch pattern 32 has a fixed left needle drop position. When you change the stitch width, the right needle drop position will change.

(B) The stitch patterns 28 have a fixed center needle drop position. The stitch width changes symmetrically.

(C) The stitch patterns 29-31 and 33 have a fixed right needle drop position. When you change the stitch width, the left needle drop position will change.

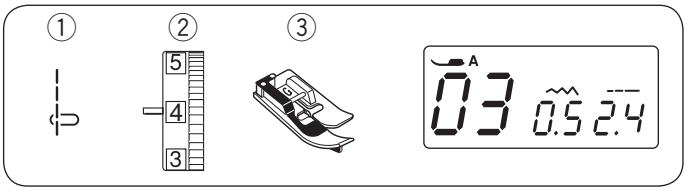

Pintucking

① Stitch pattern: 03
② Thread tension dial: 3 to 6
③ Presser foot: Blind hem foot G

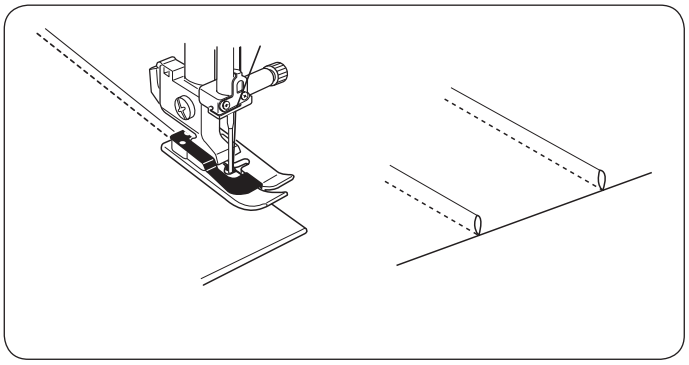

Fold the fabric with the wrong sides together.

Place the folded fabric under the blind hem foot.

Align the edge of the fold with the guide on the foot, and lower the foot.

Sew while guiding the edge of the fold along the guide.

Open the fabric and press the tuck to one side.

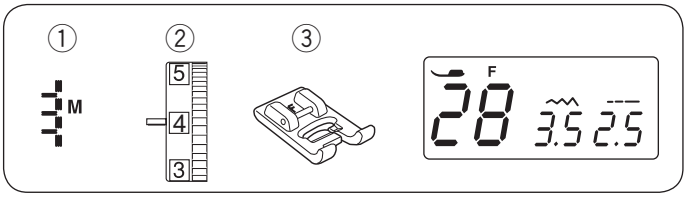

Fringing

① Stitch pattern: 28
② Thread tension dial: 1 to 4
③ Presser foot: Satin stitch foot F

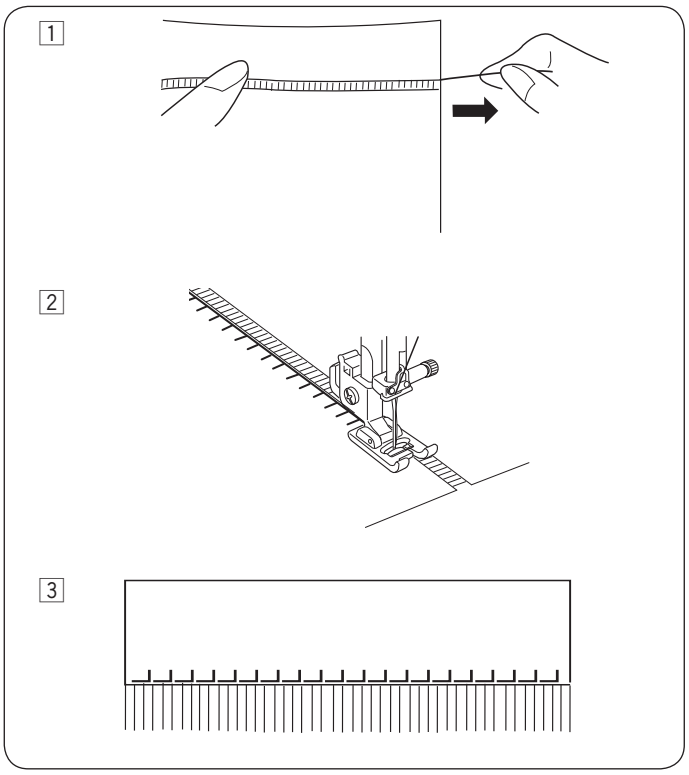

Fringing adds a special touch on table linens and shawls. Choose a firm, woven fabric like linen where threads can be removed easily.

1 Carefully cut the fabric on the grain. Remove a single strand of yarn or thread where the fringing is to begin.

2 Sew down the left side so the right hand stitches fall in the open space.

3 Remove all excess yarn located to the right of the stitching and create a fringe.

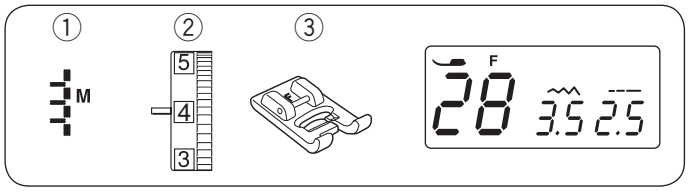

Drawn Work

① Stitch pattern: 28
② Thread tension dial: 1 to 4
③ Presser foot: Satin stitch foot F

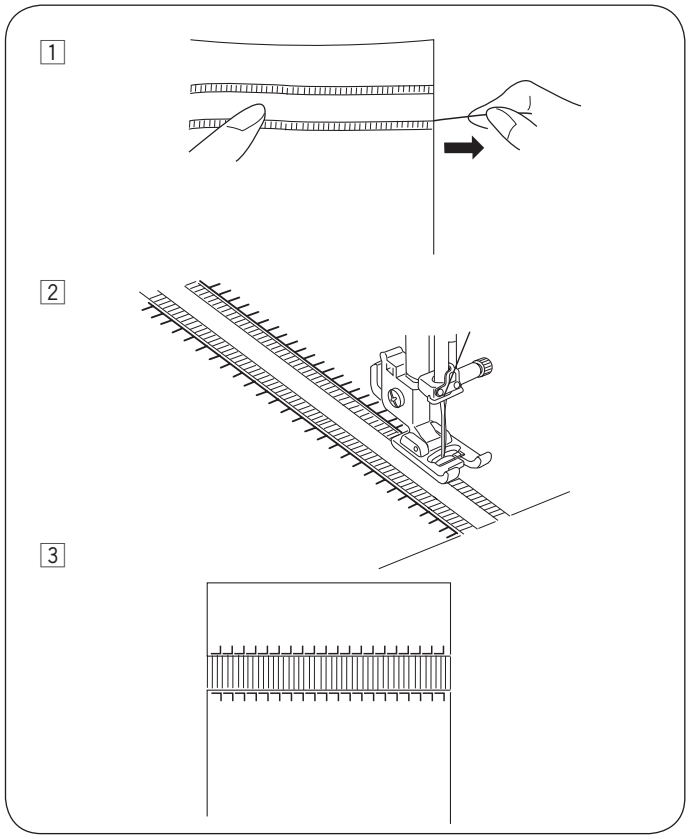

Drawn work uses the same method as fringing. Choose a firm, woven fabric like linen where threads can be removed easily.

1 Carefully cut the fabric on the grain. Determine the width of the drawn work and remove one strand of yarn or fabric thread at each end.

2 Sew down the left side, guiding the fabric so the right hand stitches fall in open space. After finishing the left side, turn the fabric around 180°. Sew down the other side.

3 Remove the yarn or fabric threads between the stitching.

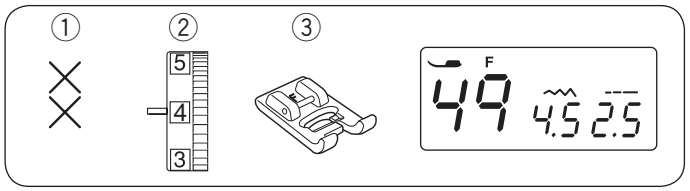

Cross Stitch

① Stitch pattern: 49
② Thread tension dial: 3 to 6
③ Presser foot: Satin stitch foot F

* The stitch patterns 50-53 can also be used.

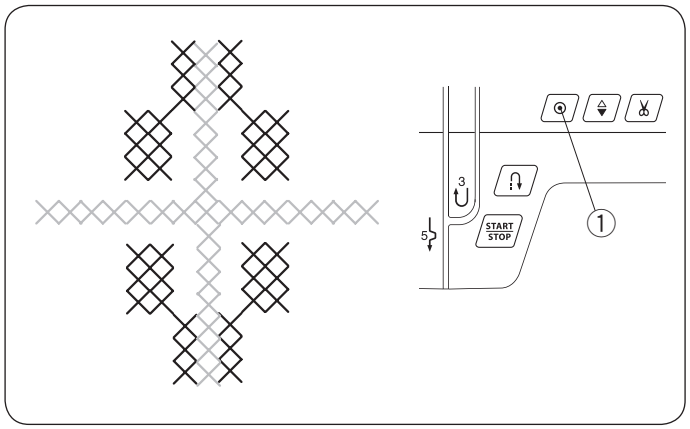

You can make cross stitch designs with these patterns, in half the time it would take if embroidered by hand.

Use a plain close woven fabric such as linen or wool flannel. If you use light weight fabric, apply a tear away backing for support.

Sew from the center of the design outward.

If you press the auto-lock button before sewing, the machine will sew one unit of the cross stitch and stop automatically.

① Auto-lock button

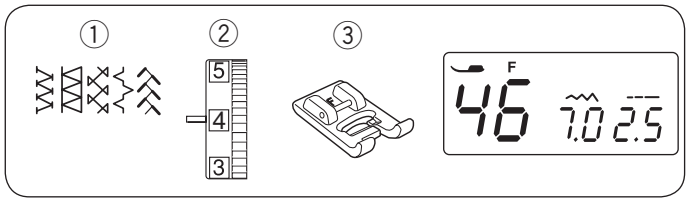

Fagoting

① Stitch pattern: 46
② Thread tension dial: 3 to 6
③ Presser foot: Satin stitch foot F

* The stitch patterns 14, 42, 43 and 62 can also be used.

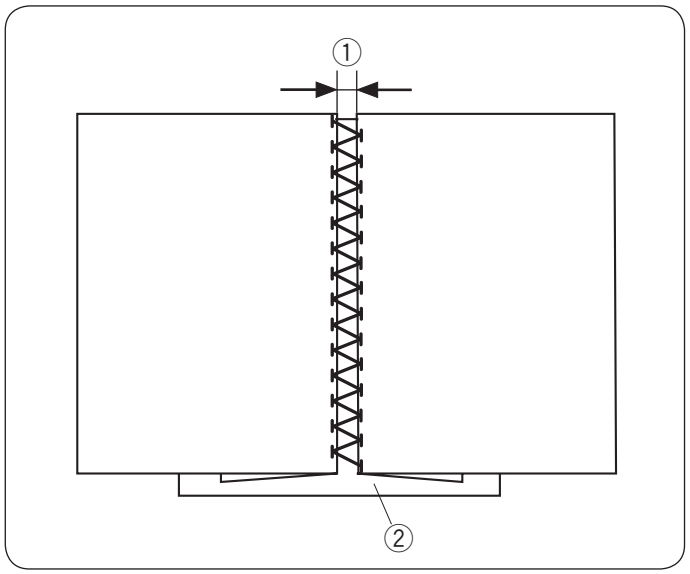

Use these stitches to join two pieces of fabric to create an open work appearance and add design interest.

Fold under each fabric edge 1.5 cm (5/8″) and press.

Pin the two edges to paper or tear backing 0.3–0.4 cm (1/8″) apart.

Sew slowly, guiding the fabric so the needle catches the folded edge on each side.

After sewing is finished, tear away the paper.

① 0.3–0.4 cm (1/8″)
② Paper

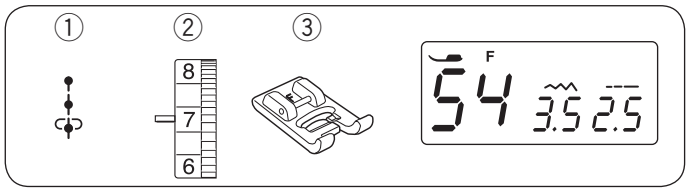

French Knots

① Stitch pattern: 54
② Thread tension dial: 5 to 8
③ Presser foot: Satin stitch foot F

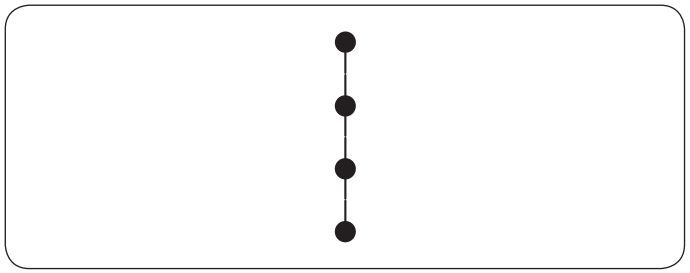

Select the stitch pattern 54.

Tighten the thread tension to 5-8 when sewing.

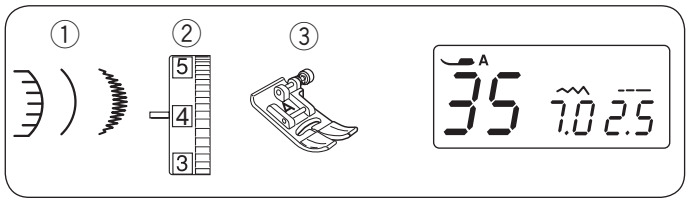

Scallop Stitch

① Stitch pattern: 35
② Thread tension dial: 3 to 6
③ Presser foot: Zigzag foot A

* The stitch patterns 45 and 71 can also be used.

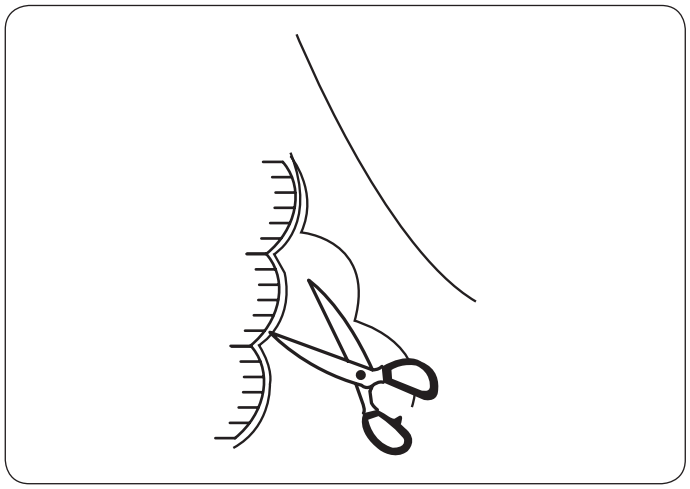

Sew the stitches approximately 1 cm (3/8″) inside the fabric edge.

Trim the outside of the stitches as shown. Make sure not to cut the thread.

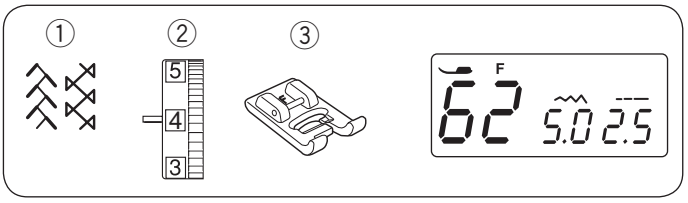

Smocking

① Stitch pattern: 62
② Thread tension dial: 3 to 6
③ Presser foot: Satin stitch foot F

* The stitch pattern 42 can also be used.

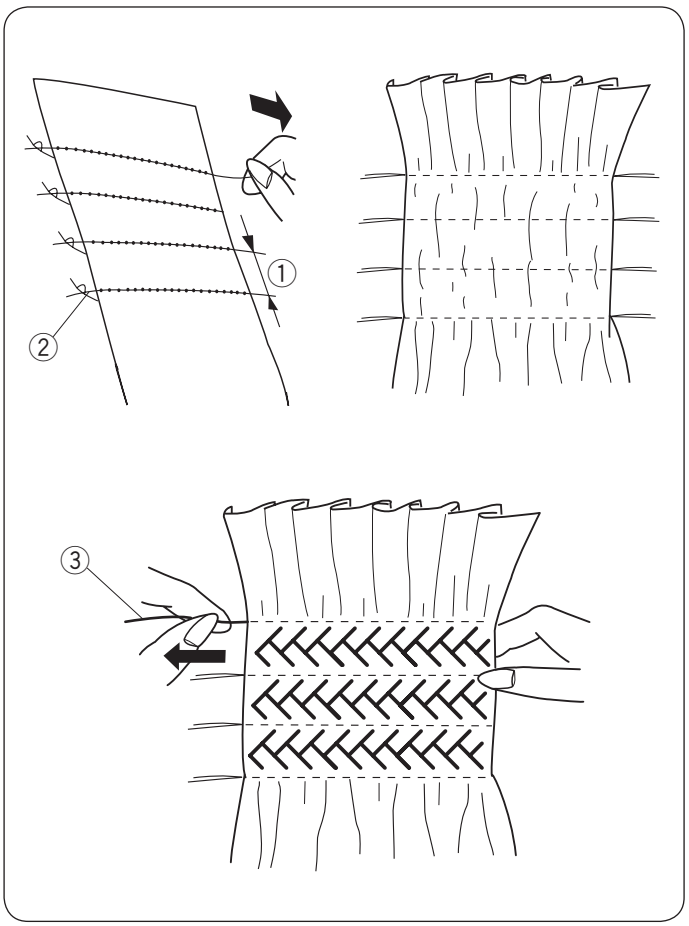

Smocking is a delicate decorative treatment used on children's clothes or women's blouses.

Use a soft and lightweight fabric such as batiste, gingham or challis.

Cut the fabric three times wider than the projected width.

Select straight stitch, set stitch length at "5.0" and loosen the thread tension.

Sew rows of straight stitches 1 cm (3/8″) apart across the area to be smocked. Knot the threads along one edge.

From the other edge, pull the bobbin threads to distribute the gathers evenly.

① 1 cm (3/8″)
② Knotted thread

Set the thread tension to 3–6 and select a smocking stitch pattern.

Sew the smocking stitch pattern between the rows of straight stitches.

Remove the straight stitches by pulling them out.

③ Straight stitch

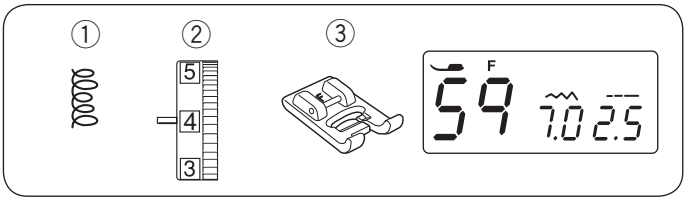

Stippling Stitch

① Stitch pattern: 59
② Thread tension dial: 3 to 6
③ Presser foot: Satin stitch foot F

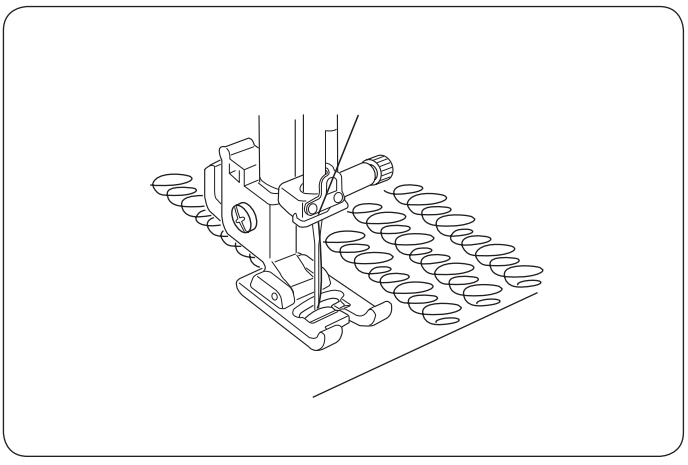

A pre-programmed stippling stitch is a fast and easy method to quilt small areas.

Place a batting (wadding) between quilt top and backing fabric.

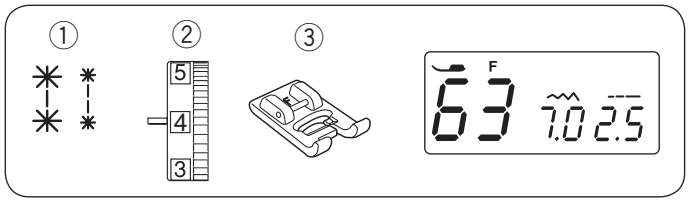

Clasp Stitches

① Stitch pattern: 63 or 64
② Thread tension dial: 3 to 6
③ Presser foot: Satin stitch foot F

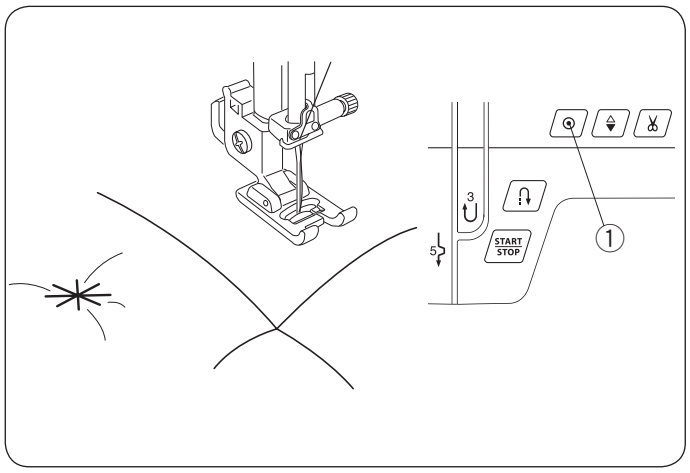

You can close quilt layers and using the clasp stitch.

Select the clasp stitch.

Press the auto-lock button.

Start sewing.

The machine sews clasp stitch and locking stitch then stops automatically.

① Auto-lock button

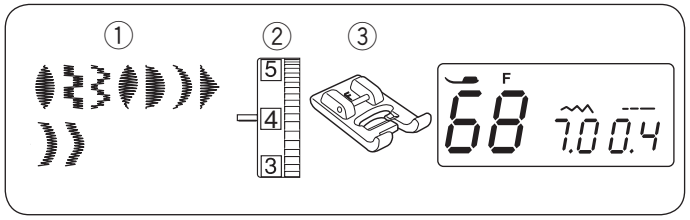

Satin Stitches

① Stitch pattern: 68
② Thread tension dial: 1 to 4
③ Presser foot: Satin stitch foot F

* The stitch patterns 66-67 and 69-74 can also be used.

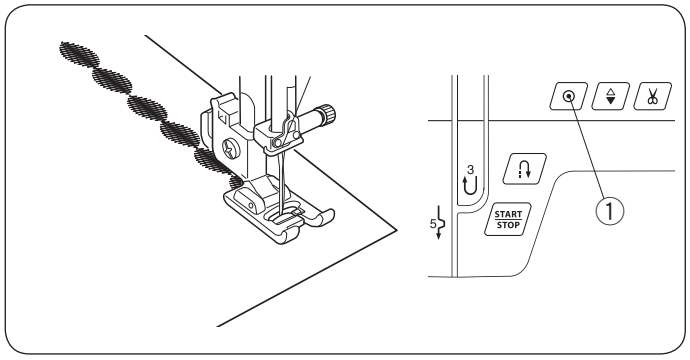

For better sewing results, interfacing should be used on the wrong side of the fabric when you use stretch or elastic fabrics.

Press the auto-lock button to finish the end of the pattern.

① Auto-lock button

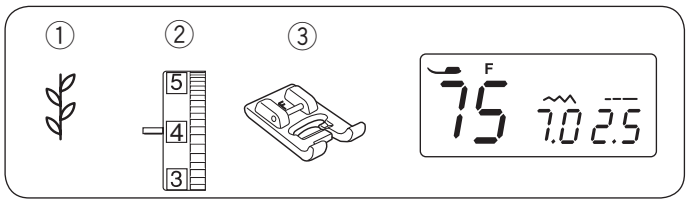

Decorative Stitches

① Stitch pattern: 75
② Thread tension dial: 3 to 6
③ Presser foot: Satin stitch foot F

* Stitch patterns 76–99 can also be used.

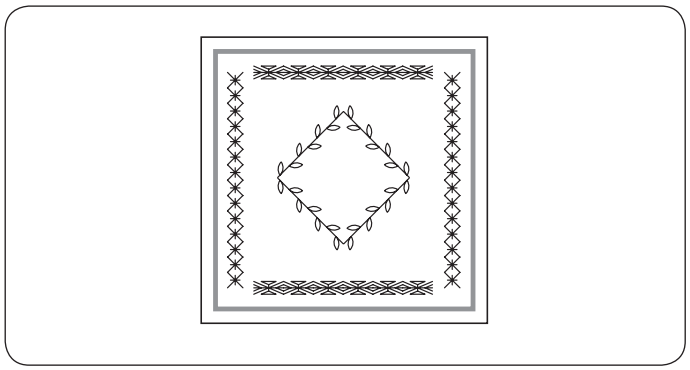

For the best sewing results, carefully align and guide the fabric when you sew with decorative stitches.
Use a tear-way backing if necessary.

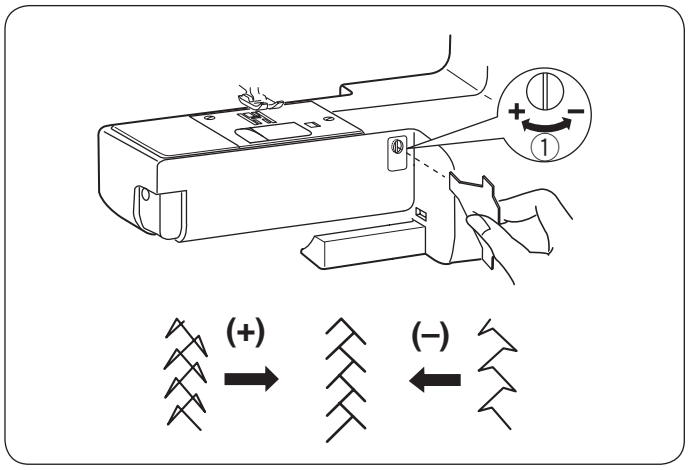

Correcting Deformed Stitch Patterns

The sewing results of stretch stitch patterns may vary depending on sewing conditions, such as sewing speed, fabric type, number of layers etc.

If stretch stitch patterns are deformed, correct them by turning the feed balancing dial with the screwdriver.

If the pattern is compressed, turn the dial in the direction of “+”.

If the pattern is drawn out, turn the dial in the direction of “–”.

① Feed balancing dial

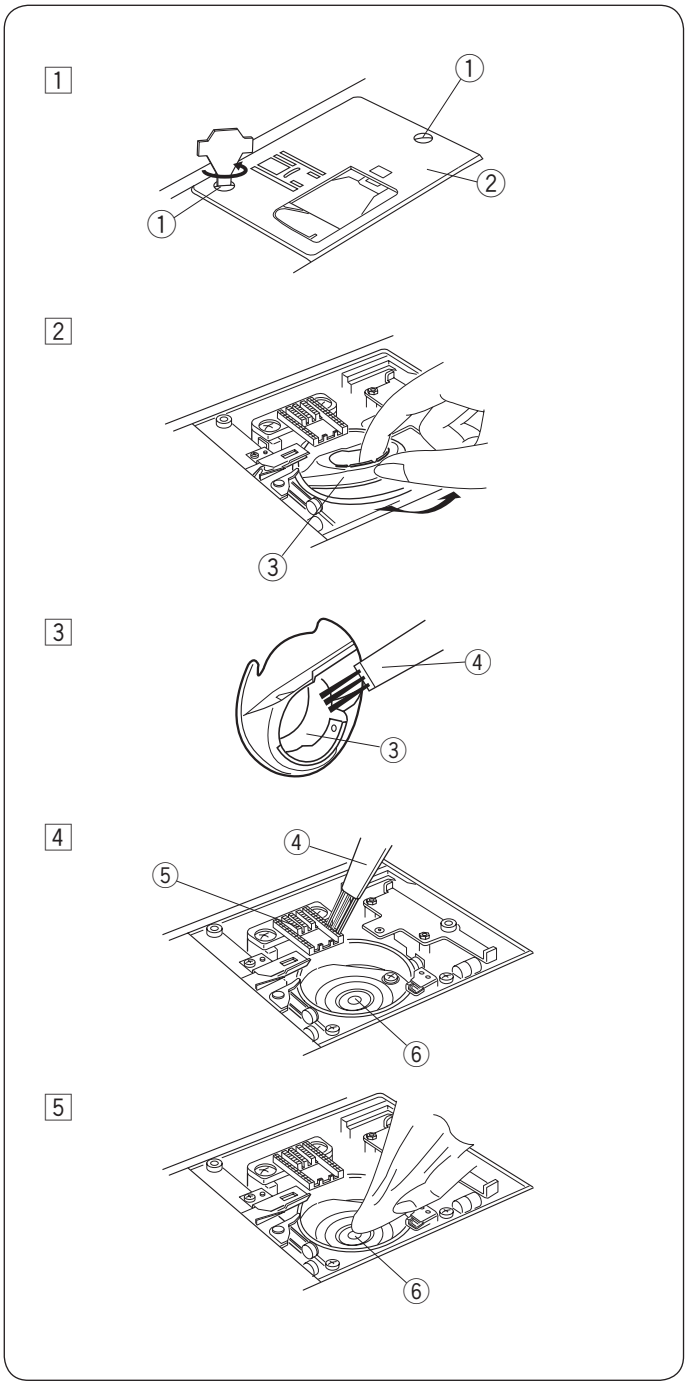

CARE OF YOUR MACHINE

Cleaning the Hook Race and Feed Dog

⚠ WARNING:
Turn the power switch off and unplug the machine before cleaning.
Do not dismantle the machine other than as explained in this section.

⚠ CAUTION:
Do not store the machine in a high-humidity area, near a heat radiator, or in direct sunlight. Store the machine in cool dry place.

NOTE:
Clean the outside of the machine with a soft cloth and neutral soap.

Press the needle up/down button to raise the needle, turn the power switch off, then unplug the sewing machine.
Remove the needle and presser foot.
Remove the hook cover plate by sliding the hook cover plate release button to the right. Take out the bobbin.
Brush out dust and lint. (You may also use a vacuum cleaner.)

1 Remove the setscrews on the needle plate with the screwdriver supplied with the machine. Remove the needle plate.
① Setscrew
② Needle plate

2 Lift up the bobbin holder and remove it.
③ Bobbin holder

3 Clean the bobbin holder with a lint brush.
④ Lint brush

4 Clean the feed dog and hook race with the lint brush.
⑤ Feed dog
⑥ Hook race

5 Clean the inside of the hook race with a dry cloth.
You may also use a vacuum cleaner.

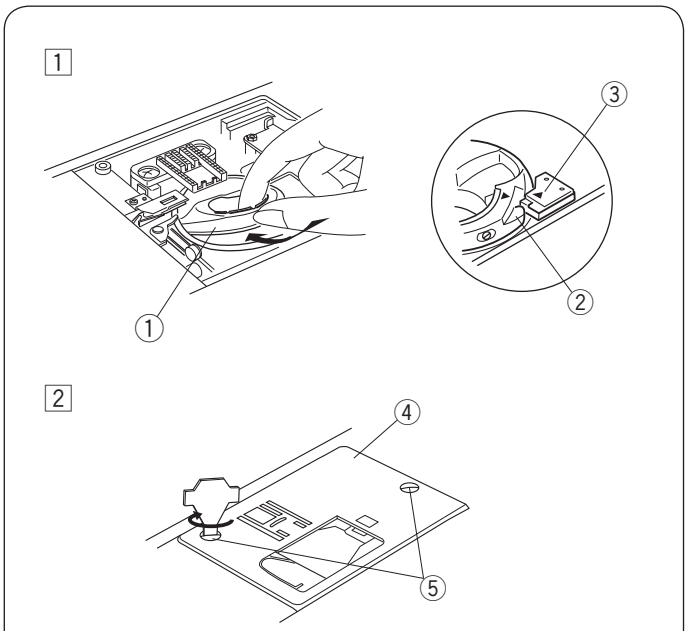

Installing the Bobbin Holder

1 Insert the bobbin holder so that the knob fits next to the stopper in the hook race.
① Bobbin holder
② Knob
③ Stopper

2 Attach the needle plate with the setscrews.
After cleaning the machine, make sure the needle and presser foot are attached.
④ Needle plate
⑤ Setscrew

Problems and Warning Signals

If a buzzer sounds and the LCD display shows a warning sign, follow the guidance below.

Warning Sign	Cause	Try this
	1. The start/stop button is pressed with the foot control connected. 2. The foot control is out of order. (The foot control sign keeps blinking.)	Disconnect the foot control. Contact the service center or the store from whom the machine was purchased.
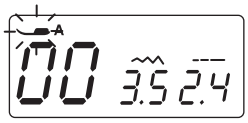	The machine is started the with the presser foot raised.	Lower the presser foot and start the machine again.
	The bobbin winder spindle is shifted to the right.	Shift the bobbin winder spindle to the left for stitching.
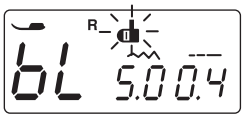	The machine will stop if the buttonhole is sewn without lowering the buttonhole lever.	Lower the buttonhole lever and start the machine again.
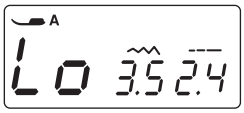	The machine is started after halting due to overload.	Wait for at least 15 seconds to restart. Turn the power switch OFF. Remove tangled threads around take-up lever, hook race.
(E1-E7) 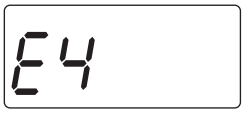	The machine does not work properly due to a problem in the control circuit.	Contact the service center or the store from whom the machine was purchased.

Audible Signal	The Buzzer sounds when:
pip	Normal operation.
pip-pip-pip	Invalid operation or malfunction.
peep	E1-E7 error occurred.
pip pi-pi-pi-peep	Buttonhole is completed.

It is not abnormal that a faint humming sound comes out from inside the machine.
LCD display may get warm when the machine has been used for hours.

Troubleshooting

Condition	Cause	Reference
The needle thread breaks	1. The needle thread is not threaded properly. 2. The needle thread tension is too tight. 3. The needle is bent or blunt. 4. The needle is incorrectly inserted. 5. The needle threads is not set under the presser foot when start sewing. 6. The thread is either too heavy or too fine for the needle.	Page 18 Pages 11-12 Page 14 Page 14 Page 21 Page 14
The bobbin thread breaks	1. The bobbin thread is not threaded properly in the bobbin holder. 2. Lint has collected in the bobbin holder. 3. The bobbin is damaged and does not turn smoothly. 4. The thread is wound loosely on the bobbin.	Page 17 Page 52 Change the bobbin. Page 16
The needle breaks	1. The needle is incorrectly inserted. 2. The needle clamp screw is loose. 3. The threads were not drawn to the rear after sewing. 4. The needle is too fine for the fabric being used. 5. An inappropriate presser foot is used.	Page 14 Page 14 Page 21 Page 14 Use the correct foot.
Skipped stitches	1. The needle is incorrectly inserted, bent or blunt. 2. The needle and/or threads are not suitable for the work being sewn. 3. A blue tip needle is not being used for sewing stretch, very fine fabrics and synthetics. 4. The needle thread is not threaded properly. 5. A poor quality needle is used.	Page 14 Page 14 Use the stretch stitch needle. Page 18 Change the needle.
Seam puckering	1. The needle thread tension is too tight. 2. The needle thread is not threaded properly. 3. The needle is too heavy for the fabric being sewn. 4. The stitch length is too long for the fabric. 5. A stabilizer is not used when sewing very fine fabrics.	Pages 11-12 Page 18 Page 14 Make stitch shorter. Apply a stabilizer.
The fabric is not feeding smoothly	1. The feed dog is packed with lint. 2. The stitches are too fine. 3. The feed dog is not raised after “drop feed” sewing.	Page 52 Make stitch longer. Page 13
Loops on the seams	1. The needle thread tension is too loose. 2. The needle is too thick or too fine for the fabric.	Page 11-12 Page 14
The machine does not work	1. The machine is not plugged in. 2. Thread has been caught in the hook race. 3. The bobbin winder spindle is not returned to the left after bobbin winding.	Page 6 Page 52 Page 16
Buttonhole sewing is not sewn properly	1. The stitch density is not suitable for the fabric being sewn. 2. The interfacing has not been used for the stretch or synthetic fabric. 3. The buttonhole lever is not lowered.	Page 32 Apply an interfacing. Page 31
The machine is noisy	1. Thread has been caught in the hook race. 2. Lint has built up in the hook race or bobbin holder.	Page 52 Page 52
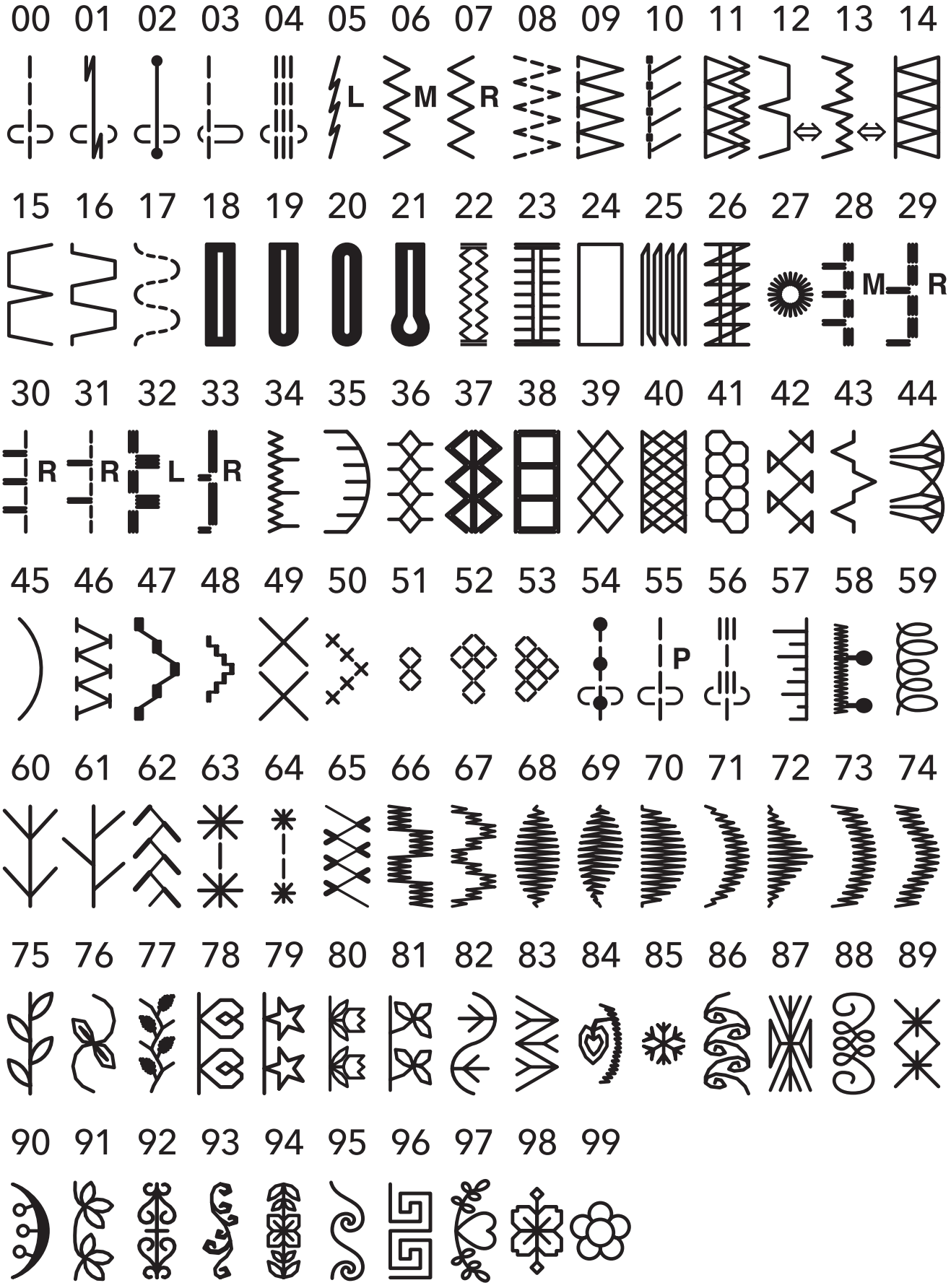
Stitch Chart